US 20170102154A1

(19) United States

(12) Patent Application Publication

SONG et al.

(10) Pub. No.: US 2017/0102154 A1

(43) Pub. Date: Apr. 13, 2017

(54) **AIR CONDITIONER AND METHOD FOR CONTROLLING THE SAME**

(71) Applicant: **Samsung Electronics Co., Ltd.**, Suwon-si (KR)

(72) Inventors: **Woo Seog SONG**, Yongin-si (KR); **Dong Yoon LEE**, Suwon-si (KR); **Bu Youn LEE**, Hwaseong-si (KR); **Dong Woon KANG**, Seongnam-si (KR); **Do Yeon KIM**, Uiwang-si (KR); **Do-Hoon KIM**, Suwon-si (KR); **Byung Ghun KIM**, Suwon-si (KR); **Young-Jae KIM**, Yongin-si (KR); **Jun Woo KIM**, Ansan-si (KR); **Hyun Ah KIM**, Suwon-si (KR); **Yong Ho SEO**, Hwaseong-si (KR); **Hyeong Joon SEO**, Suwon-si (KR); **Byung Yul SO**, Incheon (KR); **Jae Hyoung SIM**, Suwon-si (KR); **Joon-Ho YOON**, Suwon-si (KR); **Jung Dae LEE**, Seoul (KR); **Chang Seon LEE**, Suwon-si (KR); **Chul Ju LEE**, Seoul (KR); **Seung Beom LIM**, Seoul (KR); **Keun Jeong JANG**, Yongin-si (KR); **Min Gu JEON**, Suwon-si (KR); **Min-Gi CHO**, Suwon-si (KR); **Sung-June CHO**, Suwon-si (KR); **Eun Sung JO**, Seoul (KR); **Hyeong Kyu CHO**, Suwon-si (KR)

(73) Assignee: **Samsung Electronics Co., Ltd.**, Suwon-si (KR)

(21) Appl. No.: **15/389,685**

(22) Filed: **Dec. 23, 2016**

Related U.S. Application Data

(63) Continuation of application No. 15/145,199, filed on May 3, 2016, now Pat. No. 9,557,070.

(30) **Foreign Application Priority Data**

May 7, 2015	(KR)	10-2015-0063809
Oct. 23, 2015	(KR)	10-2015-0147977
Oct. 23, 2015	(KR)	10-2015-0148189
Oct. 23, 2015	(KR)	10-2015-0148190
Nov. 16, 2015	(KR)	10-2015-0160750
Mar. 25, 2016	(KR)	10-2016-0035926

Publication Classification

(51) **Int. Cl.**

F24F 1/00	(2006.01)
F24F 13/22	(2006.01)
F24F 13/08	(2006.01)
F24F 11/02	(2006.01)

(52) **U.S. Cl.**

CPC ***F24F 1/0007*** (2013.01); ***F24F 1/0011*** (2013.01); ***F24F 11/02*** (2013.01); ***F24F 13/222*** (2013.01); ***F24F 1/0033*** (2013.01); ***F24F 13/08*** (2013.01); ***F24F 1/0022*** (2013.01); *F24F 2001/0037* (2013.01); *F24F 2001/0048* (2013.01); *F24F 2221/28* (2013.01)

(57) **ABSTRACT**
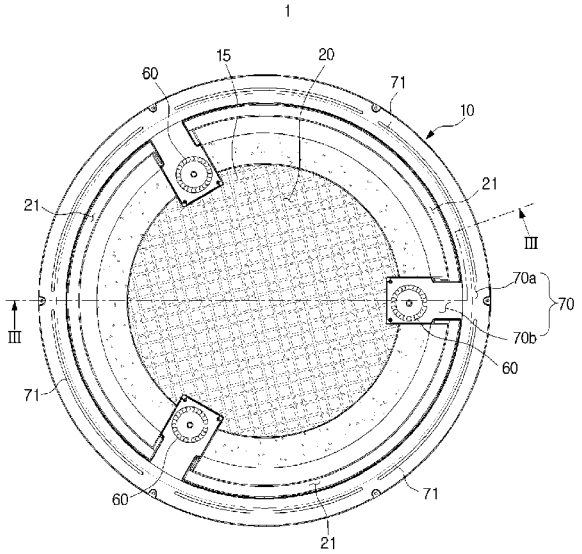
An air conditioner (AC) indoor unit includes a housing having an inlet and an outlet; a heat exchanger arranged inside the housing; a blower fan for sucking in air at the inlet to be subject to heat exchange with the heat exchanger, and discharging the heat-exchanged air out of the outlet; and an air flow control device for controlling an air flow discharged from the outlet by sucking in air around the outlet. The AC indoor unit may control the direction of a discharged air flow without a conventional blade structure, thereby increasing an amount of discharged air, reducing circulation noise, and enabling design differentiation.