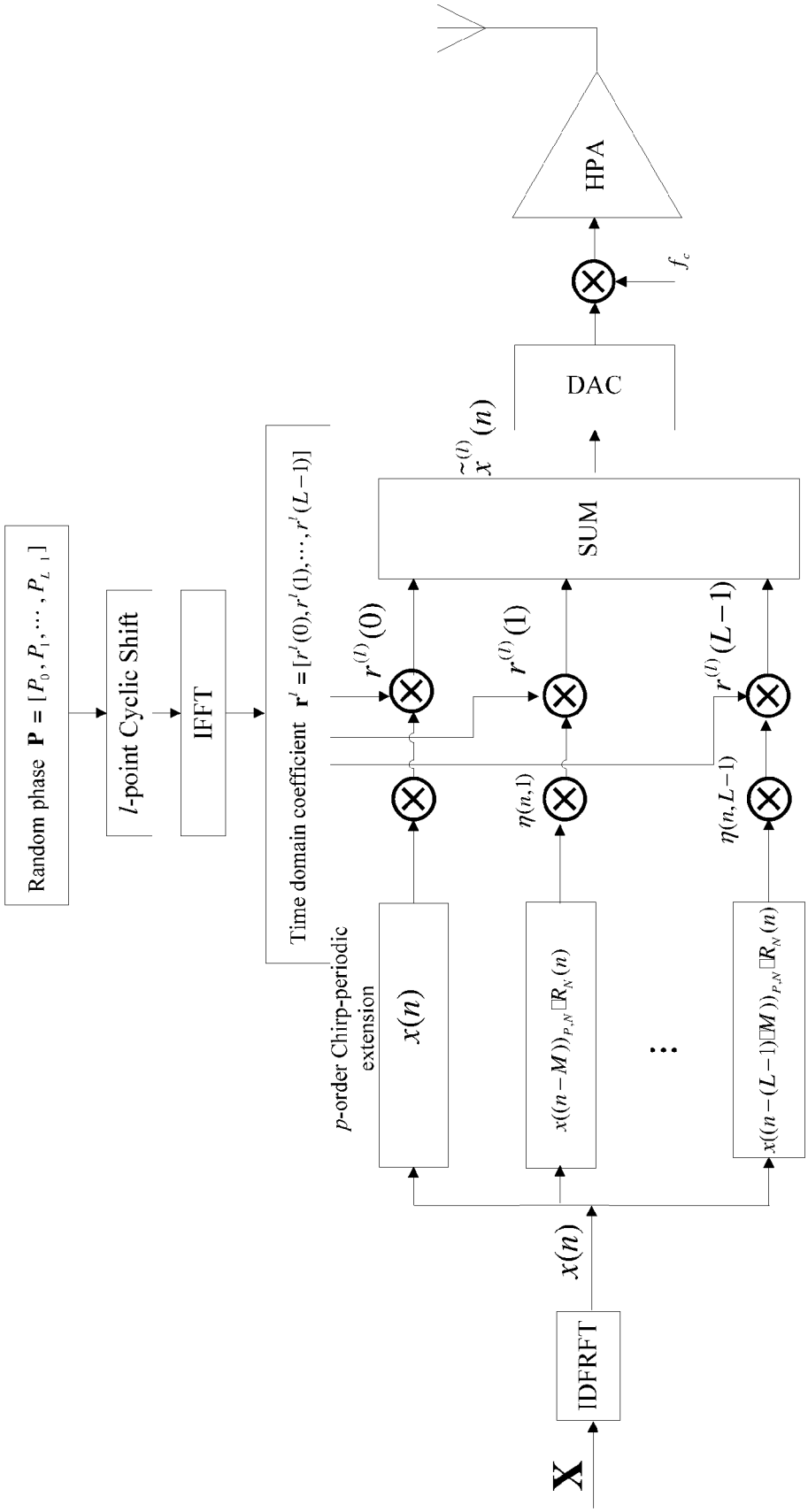
Random phase $\mathbf{P} = [P_0, P_1, \cdots, P_{L-1}]$
l-point Cyclic Shift
IFFT
Time domain coefficient $\mathbf{r}^l = [r^l(0), r^l(1), \cdots, r^l(L-1)]$
p-order Chirp-periodic extension
$x(n)$
$x((n-M))_{P,N} \cdot R_N(n)$
$x((n-(L-1)M))_{P,N} \cdot R_N(n)$
$\eta(n,1)$
$\eta(n,L-1)$
$r^{(l)}(0)$
$r^{(l)}(1)$
$r^{(l)}(L-1)$
SUM
$\tilde{x}^{(l)}(n)$
DAC
f_c
HPA
$\mathbf{X}$
IDFRFT
$x(n)$

Fig. 5