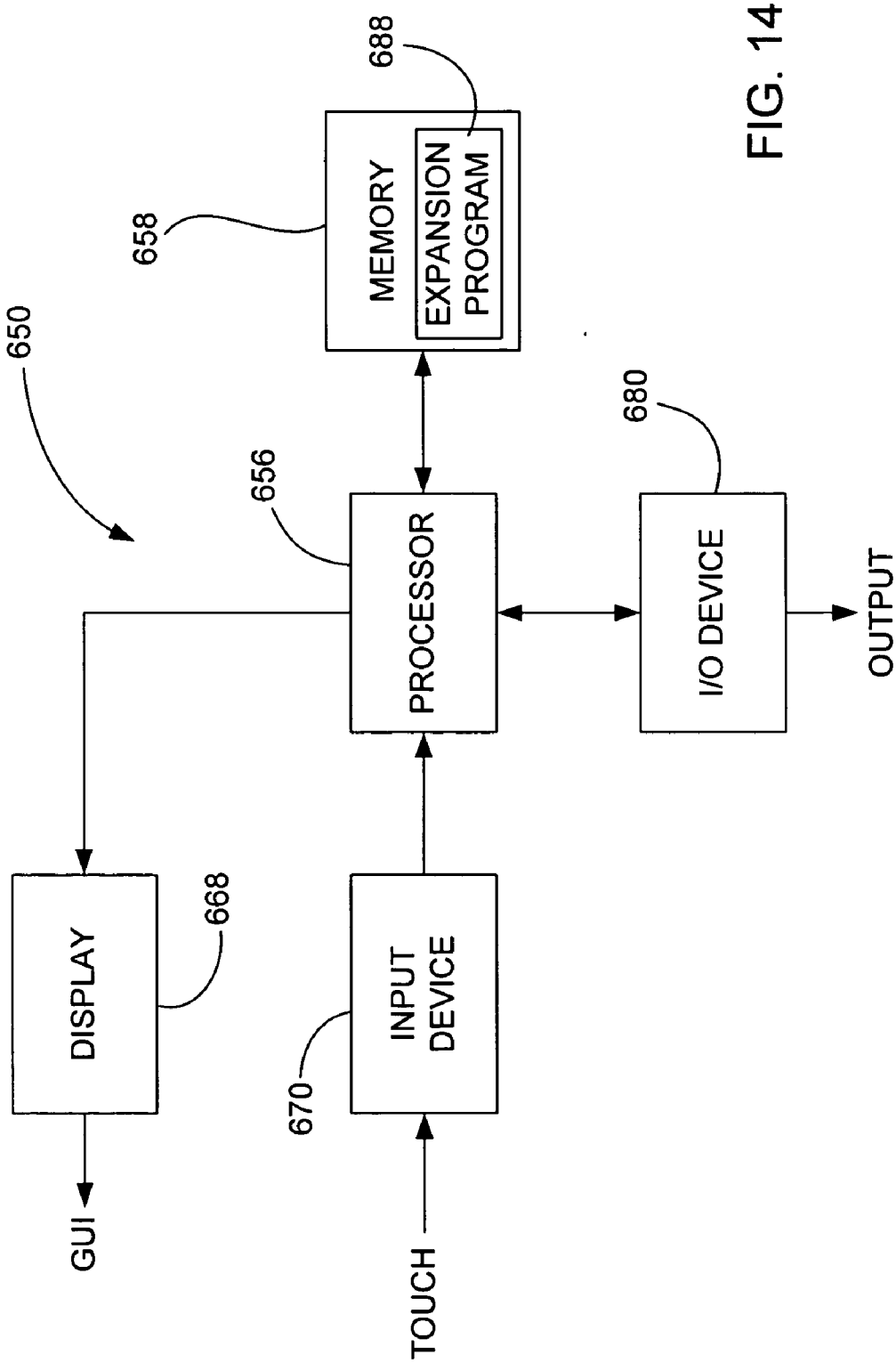
650
658
MEMORY
EXPANSION PROGRAM
688
656
PROCESSOR
680
I/O DEVICE
OUTPUT
DISPLAY
668
GUI
INPUT DEVICE
670
TOUCH

FIG. 14