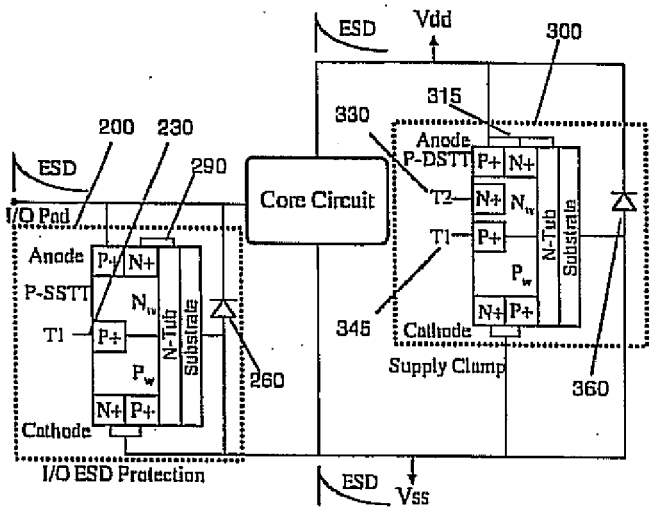
ESD
Vdd
300
315
330
200
230
290
ESD
I/O Pad
Core Circuit
Anode
P-DSTT
T2
T1
N-Tub
Substrate
Anode
P-SSTT
T1
N-Tub
Substrate
Cathode
Supply Clamp
345
260
360
Cathode
I/O ESD Protection
ESD
Vss

FIG. 4A

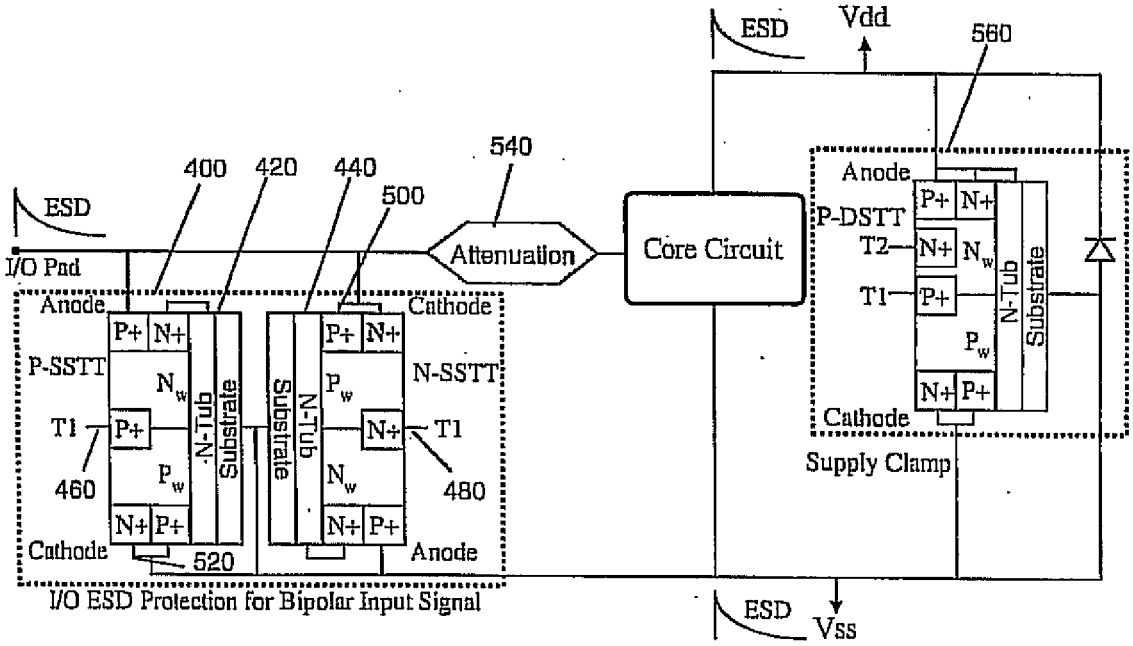
ESD
Vdd
560
540
400
420
440
500
ESD
I/O Pad
Attenuation
Core Circuit
Anode
P-DSTT
T2
T1
N-Tub
Substrate
Cathode
Supply Clamp
Anode
Cathode
P-SSTT
N-SSTT
T1
T1
460
480
N-Tub
Substrate
Substrate
N-Tub
Cathode
520
Anode
I/O ESD Protection for Bipolar Input Signal
ESD
Vss

FIG. 4B