FIG. 4

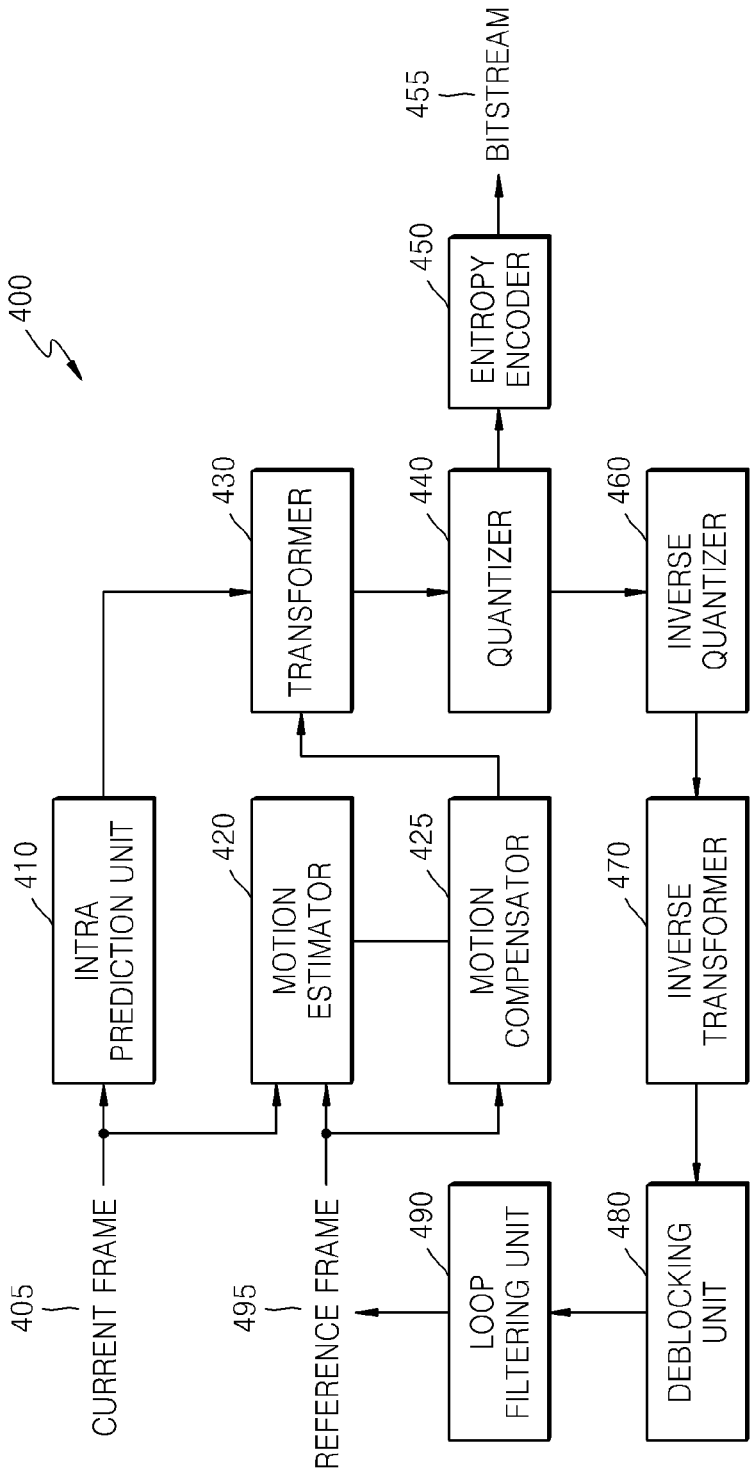
400
405
CURRENT FRAME
410
INTRA PREDICTION UNIT
420
MOTION ESTIMATOR
425
MOTION COMPENSATOR
430
TRANSFORMER
440
QUANTIZER
450
ENTROPY ENCODER
455
BITSTREAM
460
INVERSE QUANTIZER
470
INVERSE TRANSFORMER
480
DEBLOCKING UNIT
490
LOOP FILTERING UNIT
495
REFERENCE FRAME