SOLID STATE LITHIUM BATTERY DEPOSITION

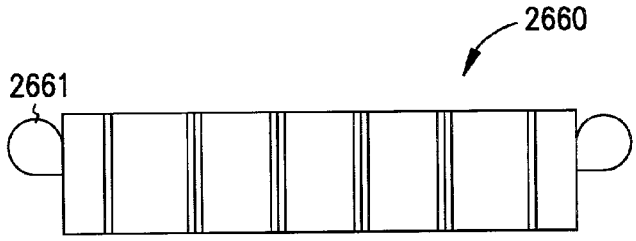

FIG. 26B

ENERGY STORAGE MATERIAL DEPOSITED ON BACK OF SHEET

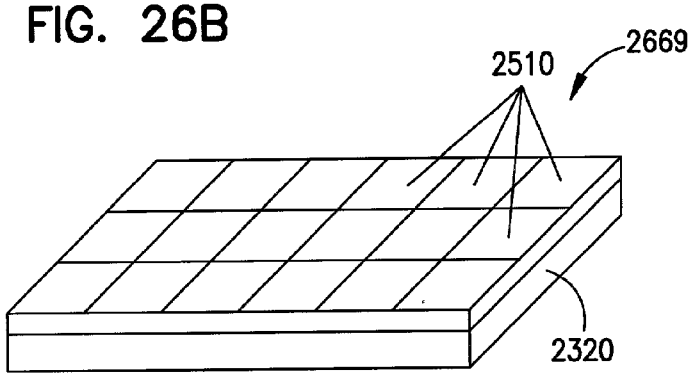

FIG. 26C

FABRIC CUT INTO DESIRED UNIT SIZE

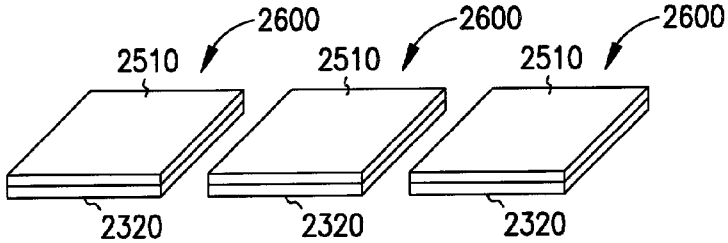

FIG. 26D

ENERGY CONVERSION MATERIAL WIRED TO ENERGY STORAGE MATERIAL

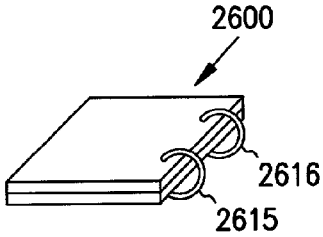

FIG. 26E

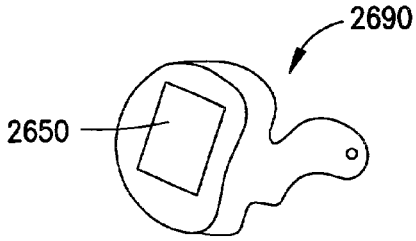

FIG. 26F