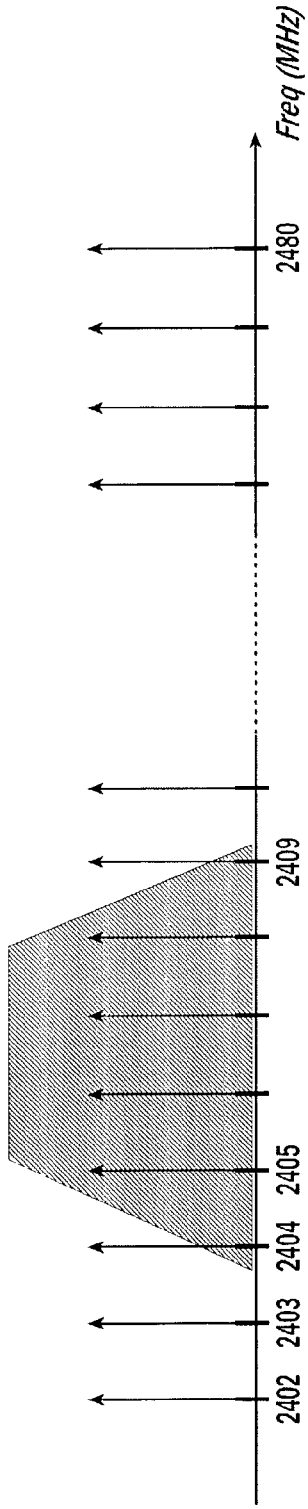

FIGURE 5(a)

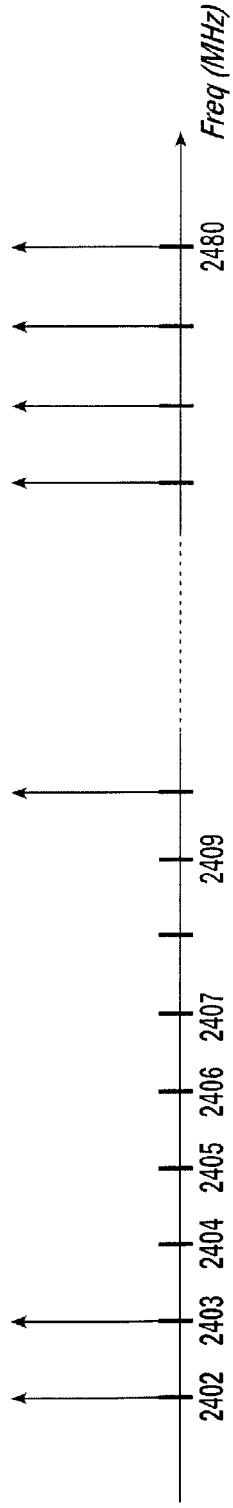

FIGURE 5(b)