FIG. 10A

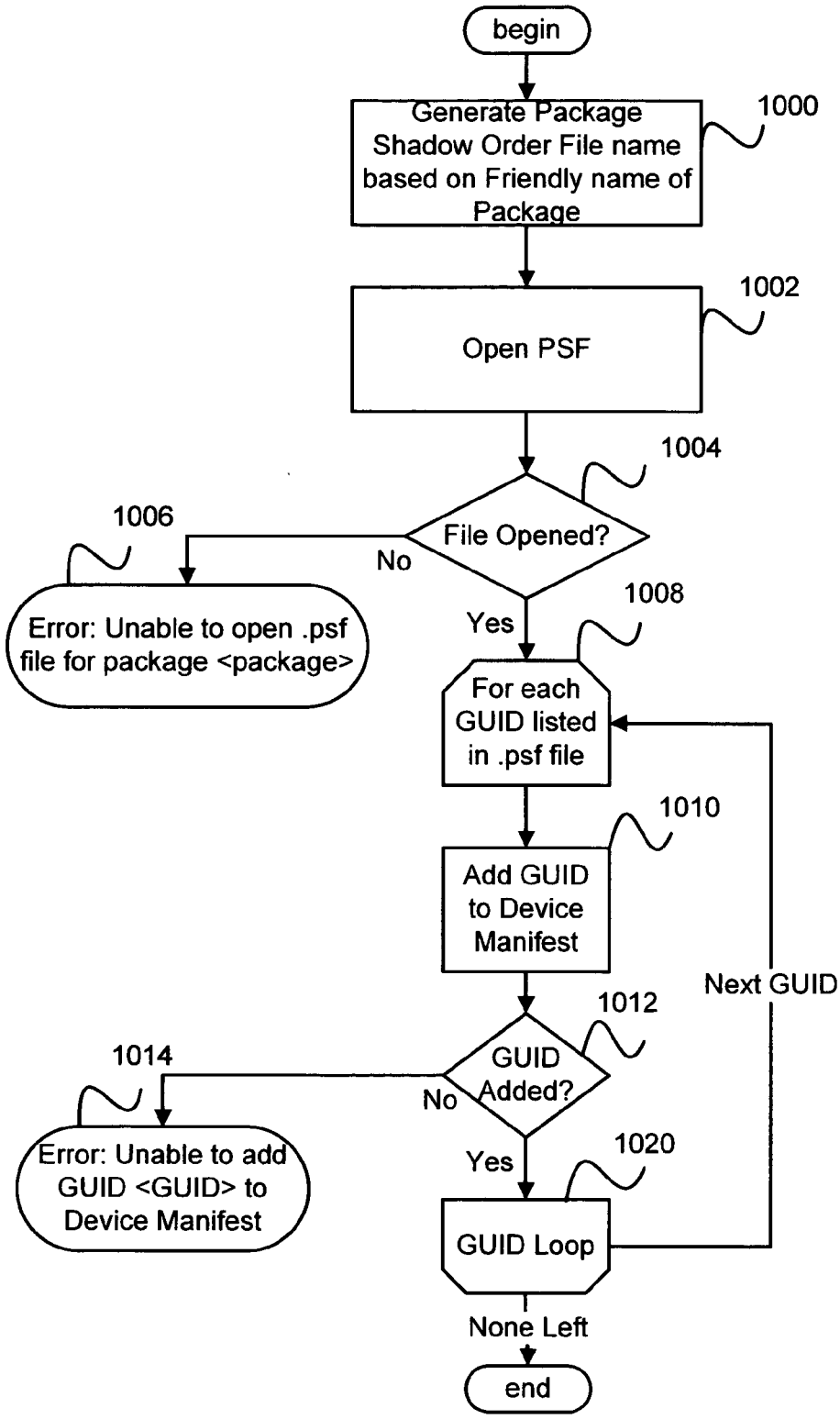
begin
Generate Package Shadow Order File name based on Friendly name of Package
1000
Open PSF
1002
1004
File Opened?
No
1006
Error: Unable to open .psf file for package <package>
Yes
1008
For each GUID listed in .psf file
1010
Add GUID to Device Manifest
Next GUID
1012
GUID Added?
No
1014
Error: Unable to add GUID <GUID> to Device Manifest
Yes
1020
GUID Loop
None Left
end