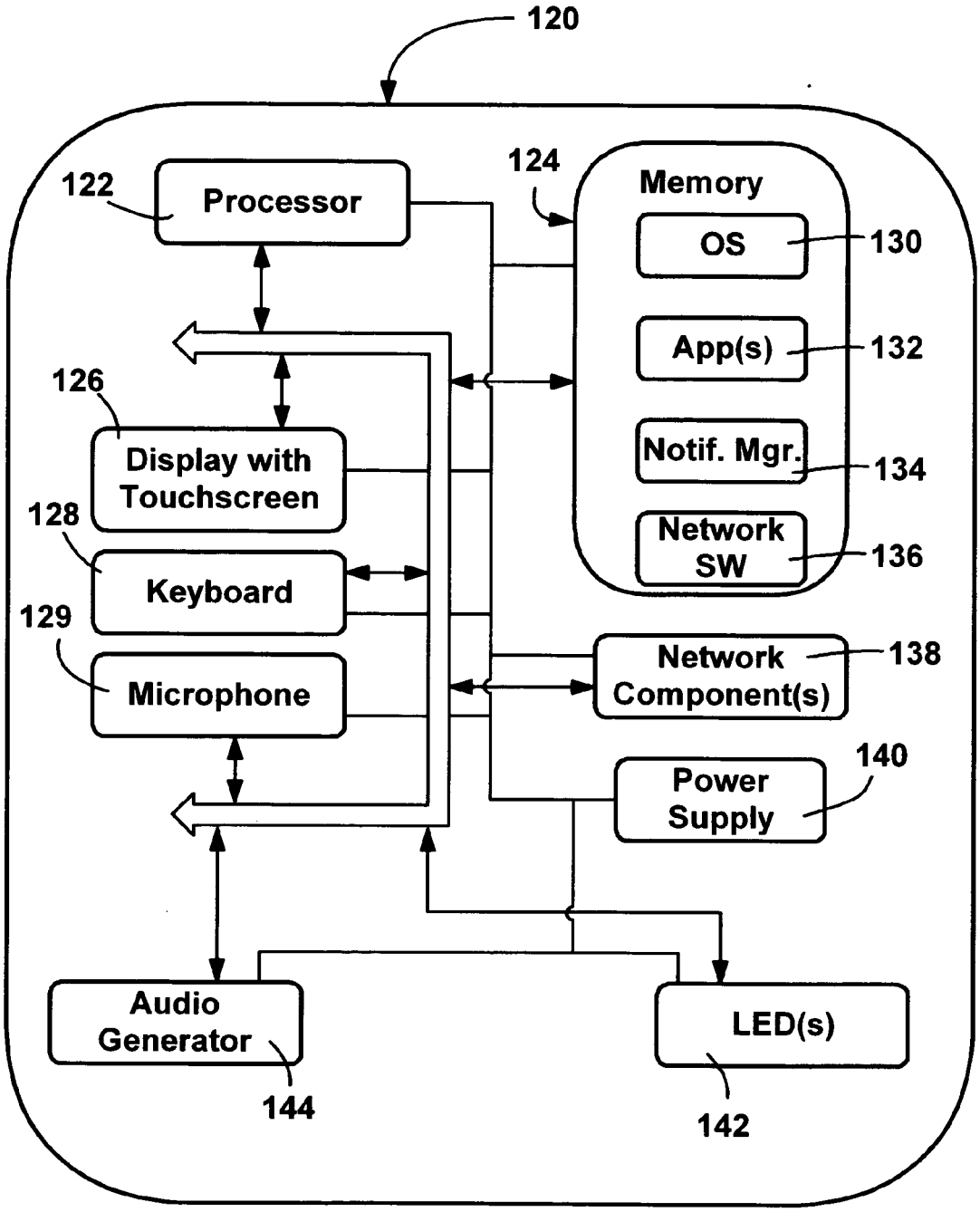
120
122
Processor
124
Memory
OS
130
App(s)
132
126
Display with Touchscreen
Notif. Mgr.
134
128
Keyboard
Network SW
136
129
Microphone
Network Component(s)
138
140
Power Supply
Audio Generator
LED(s)
144
142

FIG. 1