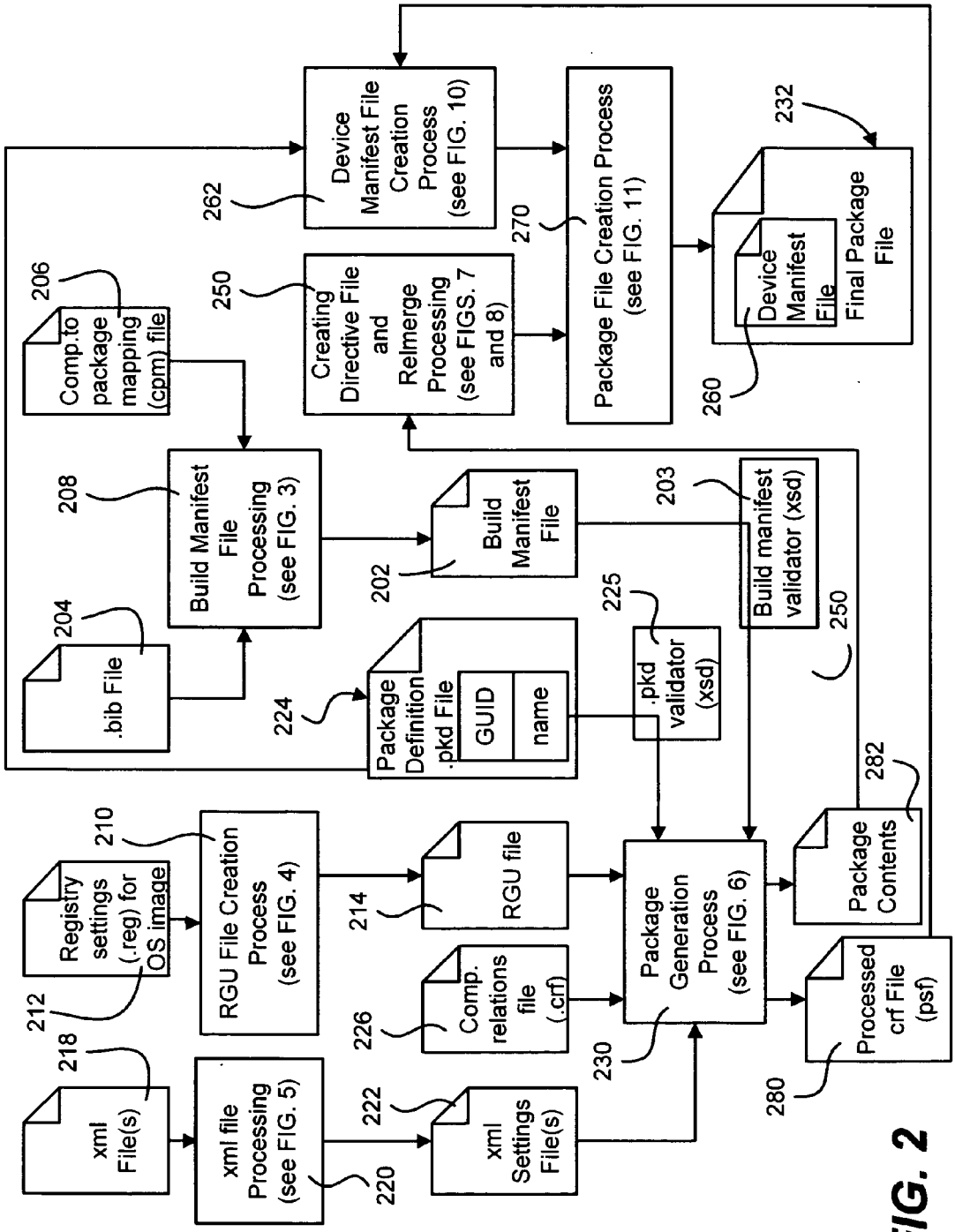
Device Manifest File Creation Process (see FIG. 10)
262
Package File Creation Process (see FIG. 11)
270
232
Final Package File
Device Manifest File
260
Comp.to package mapping (cpm) file
206
Creating Directive File and Relmerge Processing (see FIGS. 7 and 8)
250
Build Manifest File Processing (see FIG. 3)
208
Build Manifest File
202
Build manifest validator (xsd)
203
.bib File
204
Package Definition .pkd File
GUID
name
224
.pkd validator (xsd)
225
250
Registry settings (.reg) for OS image
212
RGU File Creation Process (see FIG. 4)
210
RGU file
214
Package Generation Process (see FIG. 6)
230
Package Contents
282
Comp. relations file (.crf)
226
Processed crf File (psf)
280
xml File(s)
218
xml file Processing (see FIG. 5)
220
xml Settings File(s)
222

FIG. 2