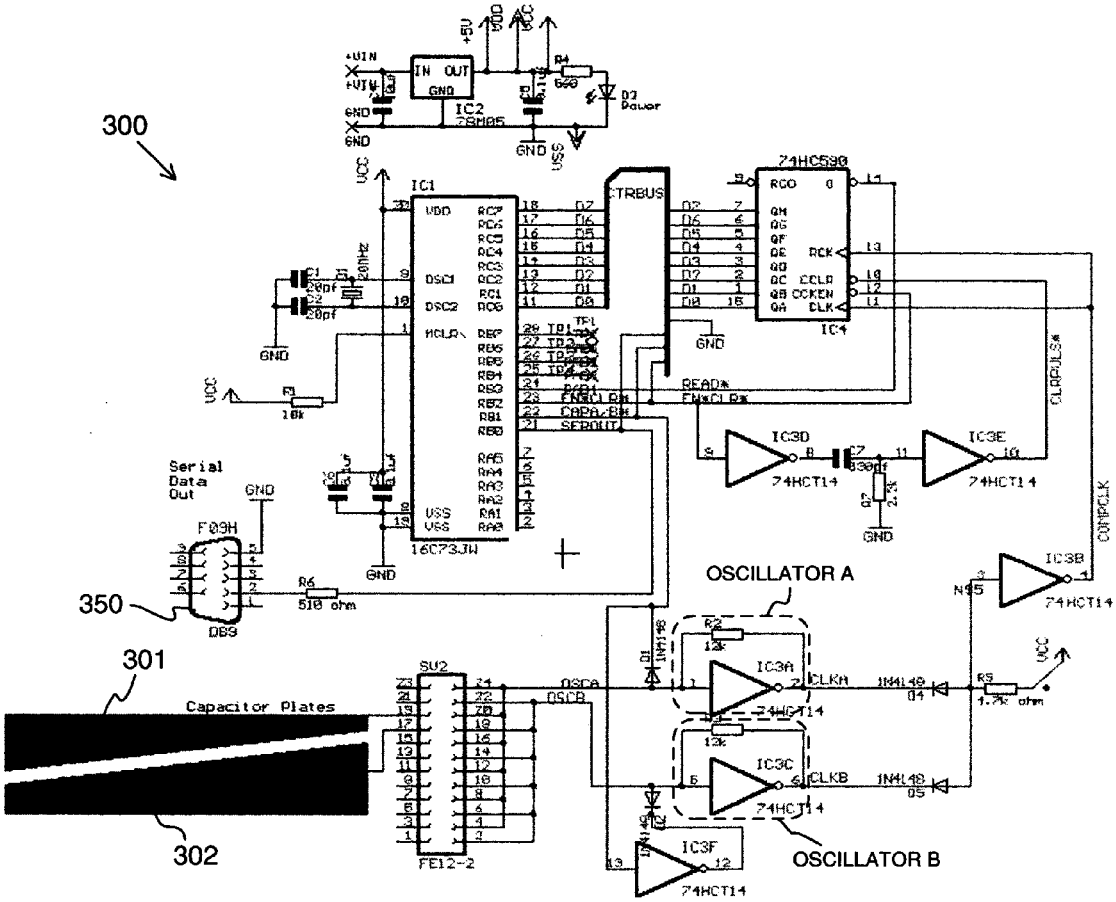
300
301
302
350
Capacitor Plates
Serial Data Out
OSCILLATOR A
OSCILLATOR B
IC1
16C73JW
IC2
78M05
IC3A
IC3B
IC3C
IC3D
IC3E
IC3F
74HCT14
IC4
74HC590
CTRBUS
SV2
FE12-2
DB9
F09H
CLKA
CLKB
CLRPULS*
COMPCLK
READ*
FN*CLR*
CAPA/B*
SERDUT
OSCA
OSCB
GND
VCC
+5V
VDD
VSS
+VIN
IN
OUT
D2 Power
R4 560
R1 10k
R6 510 ohm
R2 12k
R3 4.7k ohm
1N4148
C1 20pf
C2 20pf
C7 330pf
R7 2.2k

FIG. 3A