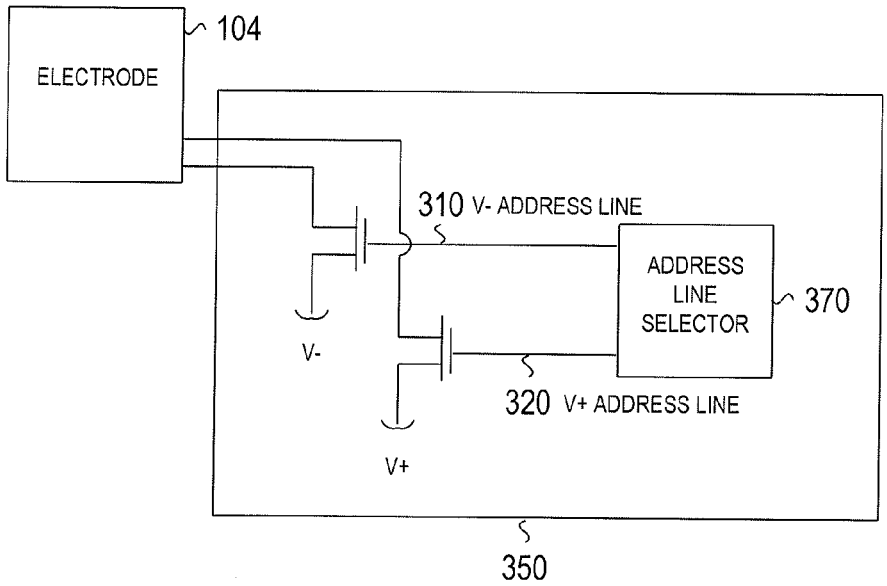
104
ELECTRODE
310 V- ADDRESS LINE
ADDRESS
LINE
SELECTOR
370
V-
320 V+ ADDRESS LINE
V+
350

Fig. 3A

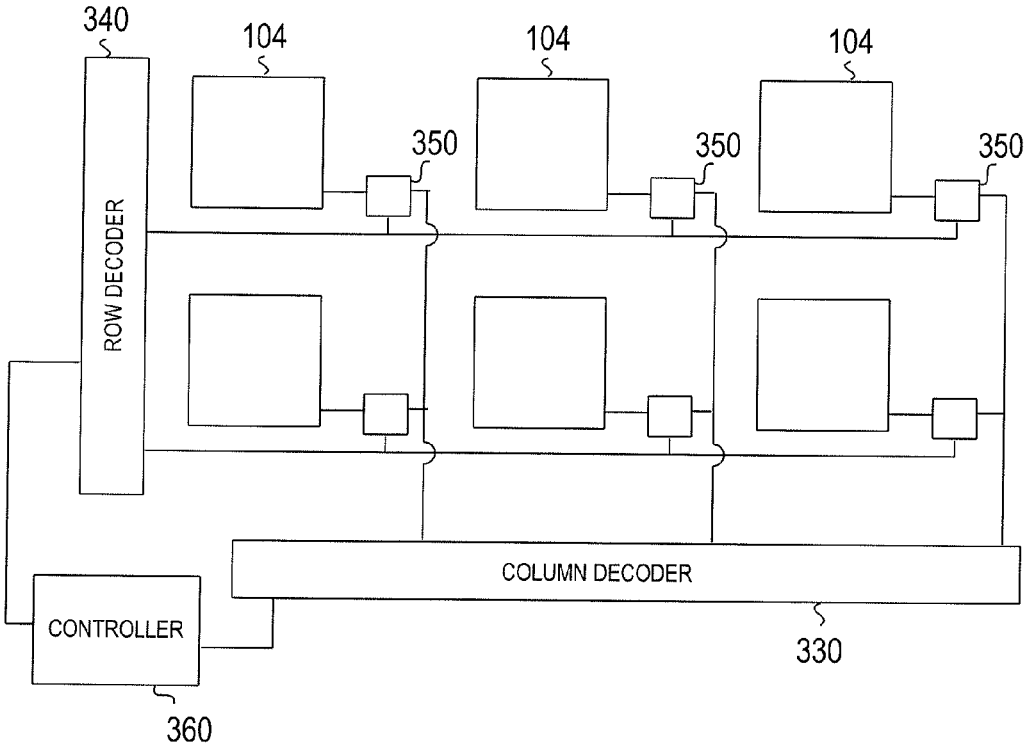
340
104
104
104
350
350
350
ROW DECODER
COLUMN DECODER
CONTROLLER
330
360

Fig. 3B