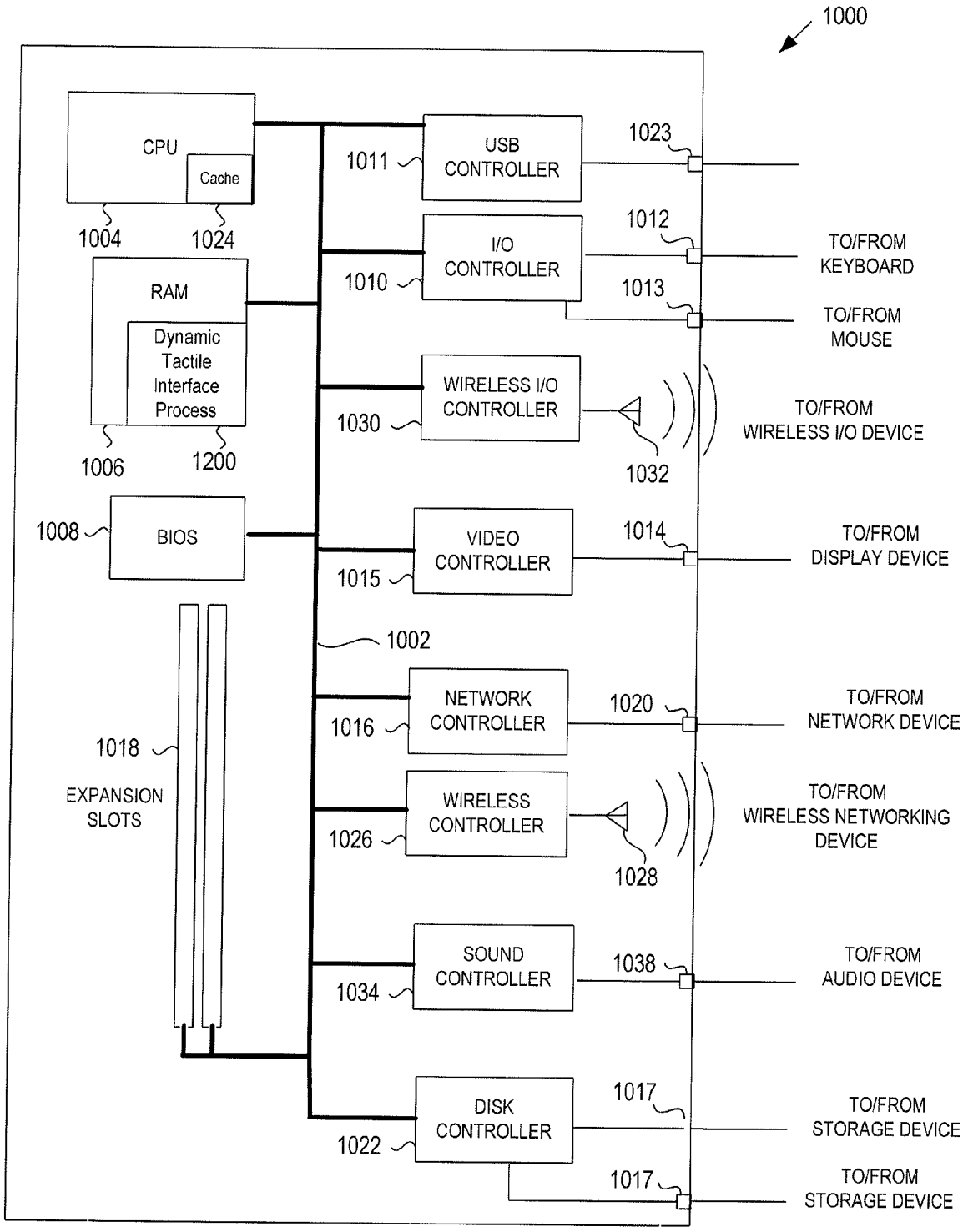
1000
CPU
Cache
1004
1024
RAM
Dynamic Tactile Interface Process
1006
1200
1008
BIOS
1018
EXPANSION SLOTS
1002
1011
USB CONTROLLER
1023
1010
I/O CONTROLLER
1012
TO/FROM KEYBOARD
1013
TO/FROM MOUSE
1030
WIRELESS I/O CONTROLLER
1032
TO/FROM WIRELESS I/O DEVICE
1015
VIDEO CONTROLLER
1014
TO/FROM DISPLAY DEVICE
1016
NETWORK CONTROLLER
1020
TO/FROM NETWORK DEVICE
1026
WIRELESS CONTROLLER
1028
TO/FROM WIRELESS NETWORKING DEVICE
1034
SOUND CONTROLLER
1038
TO/FROM AUDIO DEVICE
1022
DISK CONTROLLER
1017
TO/FROM STORAGE DEVICE
1017
TO/FROM STORAGE DEVICE

Fig. 6