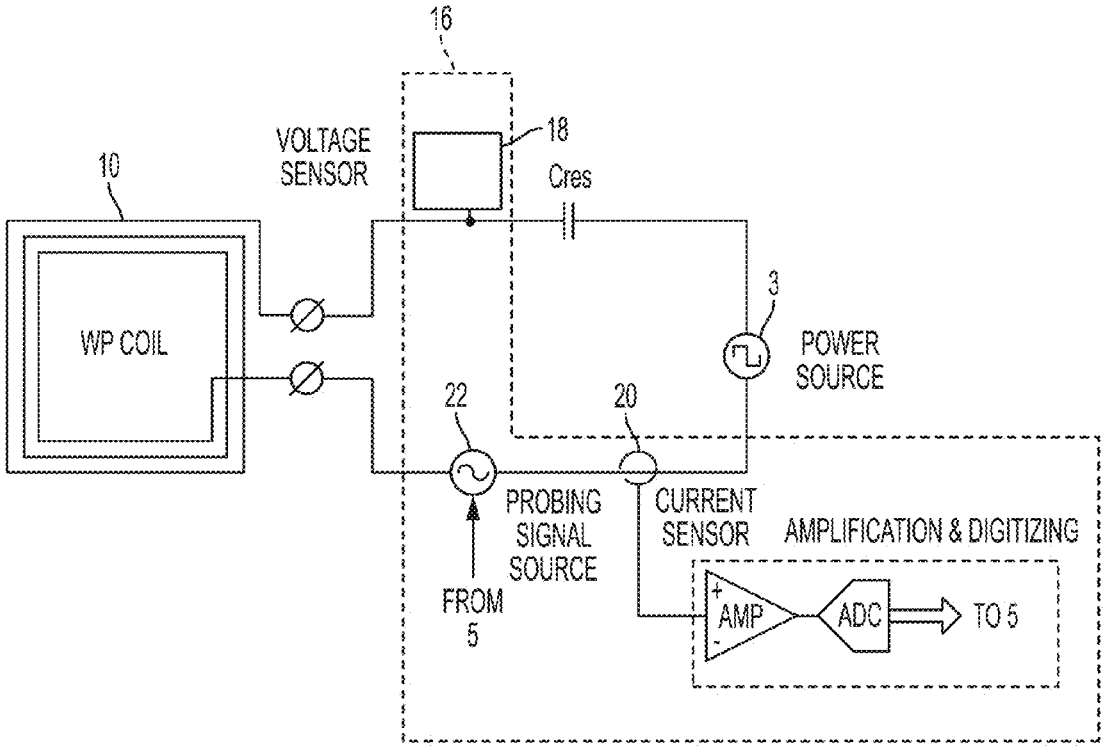
16
18
VOLTAGE SENSOR
Cres
10
WP COIL
3
POWER SOURCE
22
20
PROBING SIGNAL SOURCE
CURRENT SENSOR
AMPLIFICATION & DIGITIZING
FROM 5
AMP
ADC
TO 5

FIG. 4A