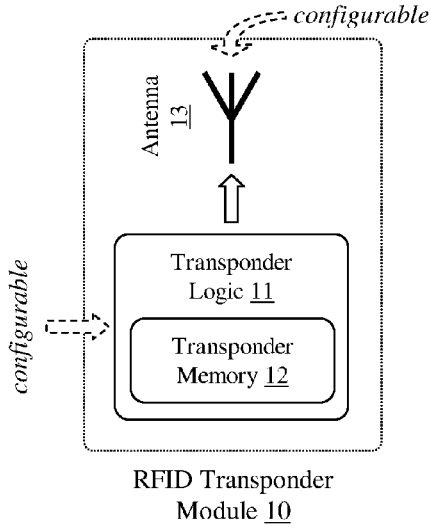

Fig. 1
State of the Art

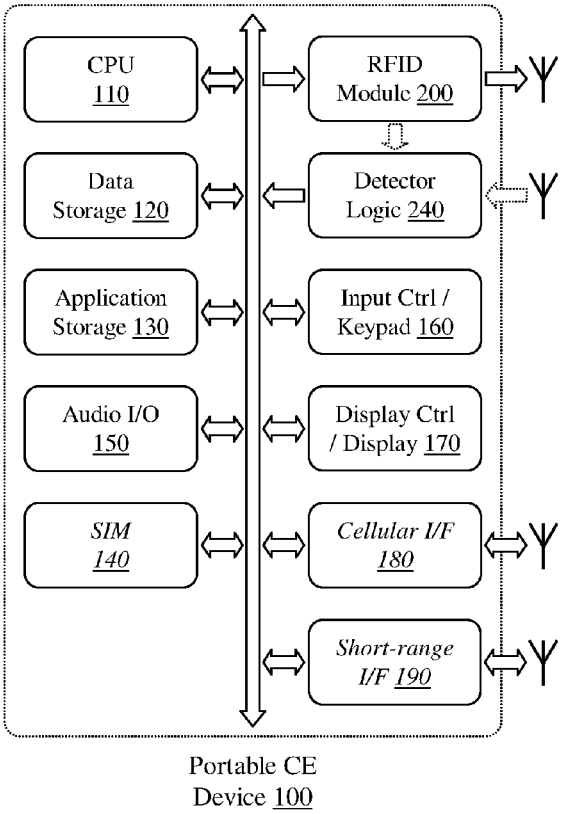

Fig. 2a