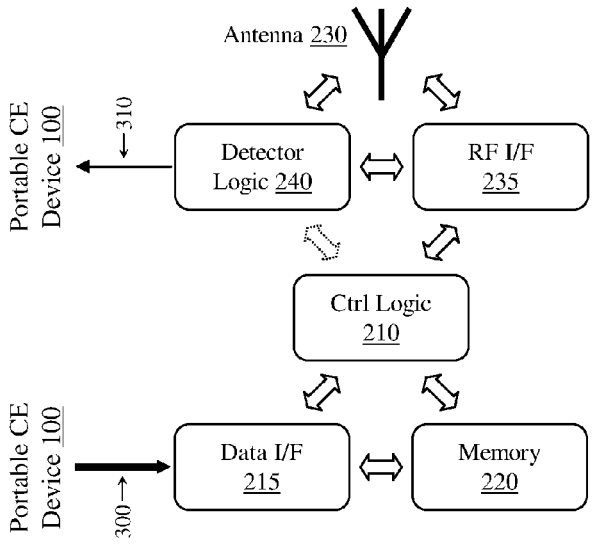
Antenna 230
Portable CE Device 100
310
Detector Logic 240
RF I/F 235
Ctrl Logic 210
Portable CE Device 100
300
Data I/F 215
Memory 220

Fig. 2b

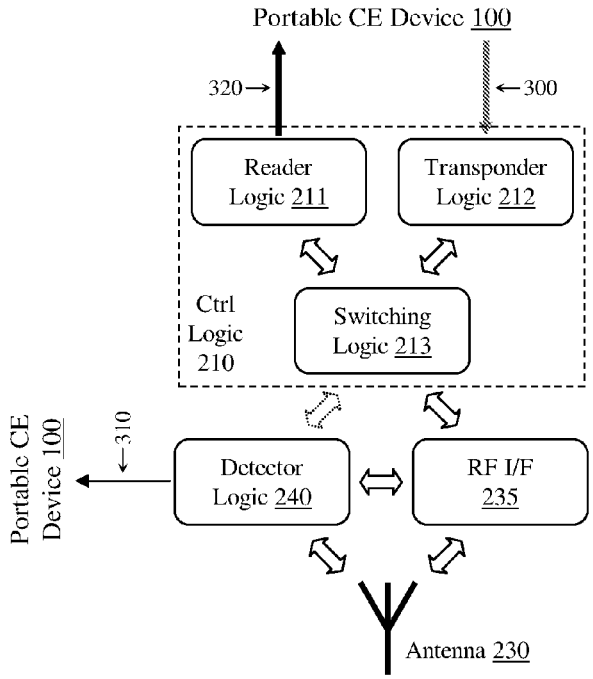
Portable CE Device 100
320
300
Reader Logic 211
Transponder Logic 212
Ctrl Logic 210
Switching Logic 213
Portable CE Device 100
310
Detector Logic 240
RF I/F 235
Antenna 230

Fig. 2c