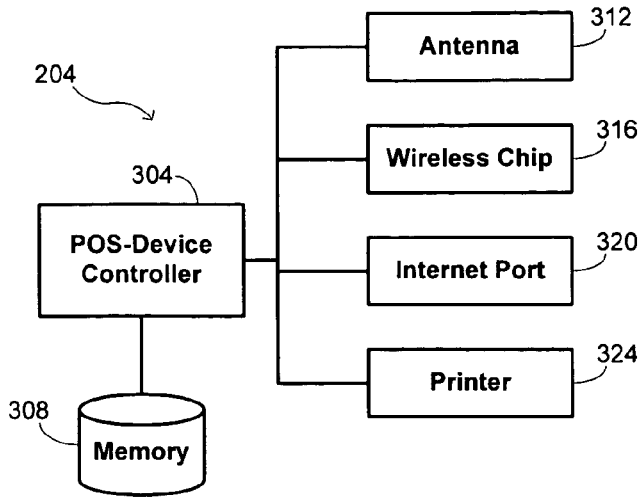
204
304
POS-Device Controller
308
Memory
Antenna
312
Wireless Chip
316
Internet Port
320
Printer
324

Fig. 3A

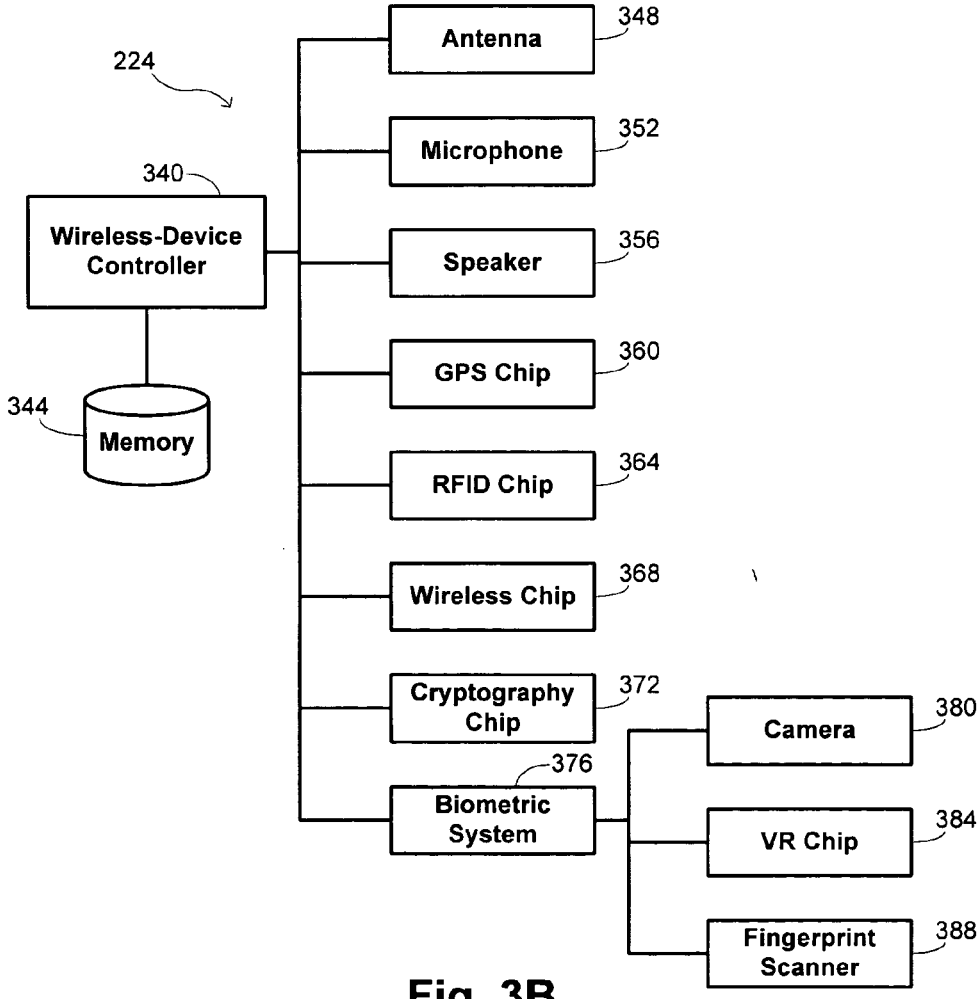
224
340
Wireless-Device Controller
344
Memory
Antenna
348
Microphone
352
Speaker
356
GPS Chip
360
RFID Chip
364
Wireless Chip
368
Cryptography Chip
372
Biometric System
376
Camera
380
VR Chip
384
Fingerprint Scanner
388

Fig. 3B