FIG. 1

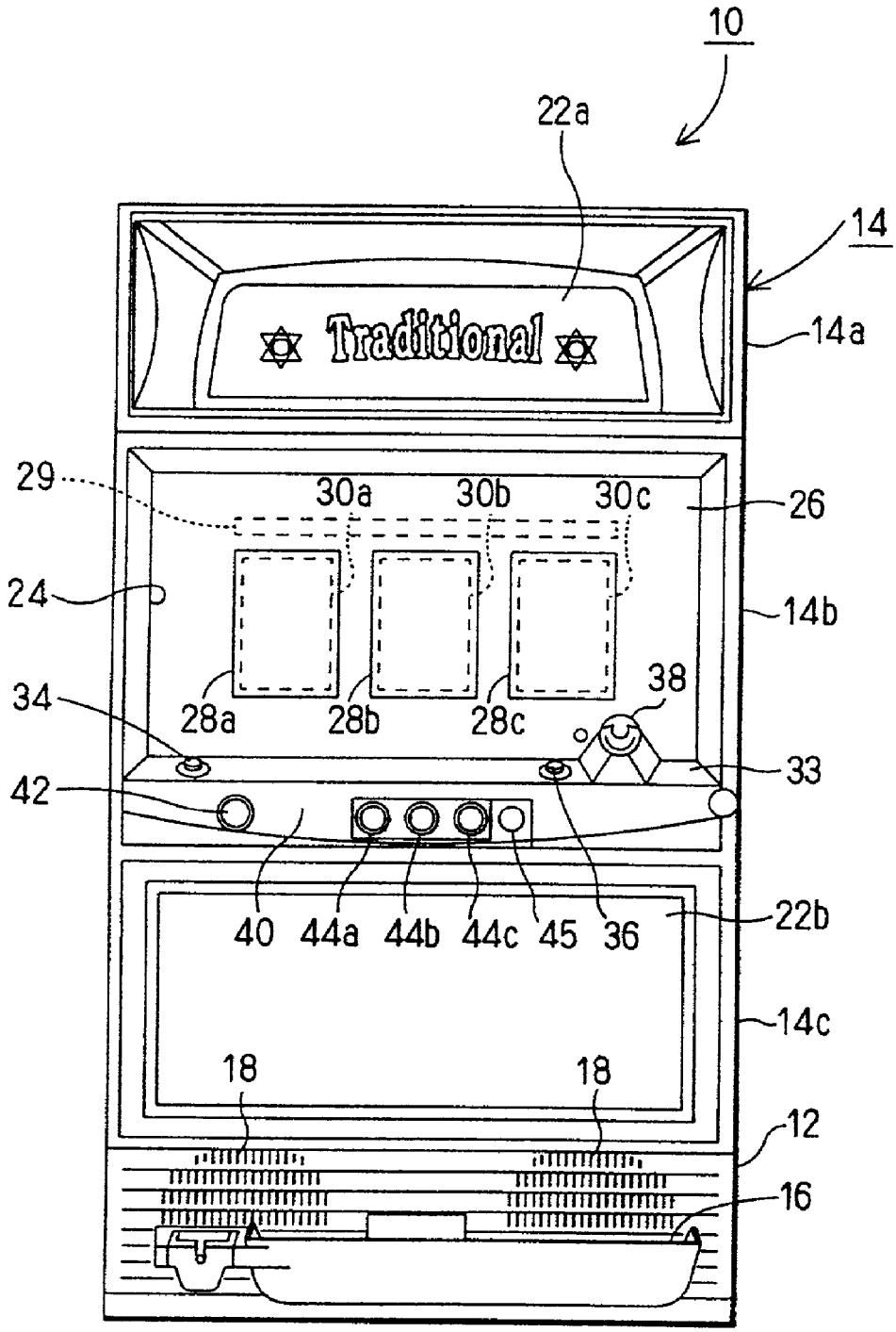
10
22a
14
Traditional
14a
29
30a
30b
30c
26
24
14b
34
28a
28b
28c
38
33
42
40
44a
44b
44c
45
36
22b
14c
18
18
12
16