FIG. 26

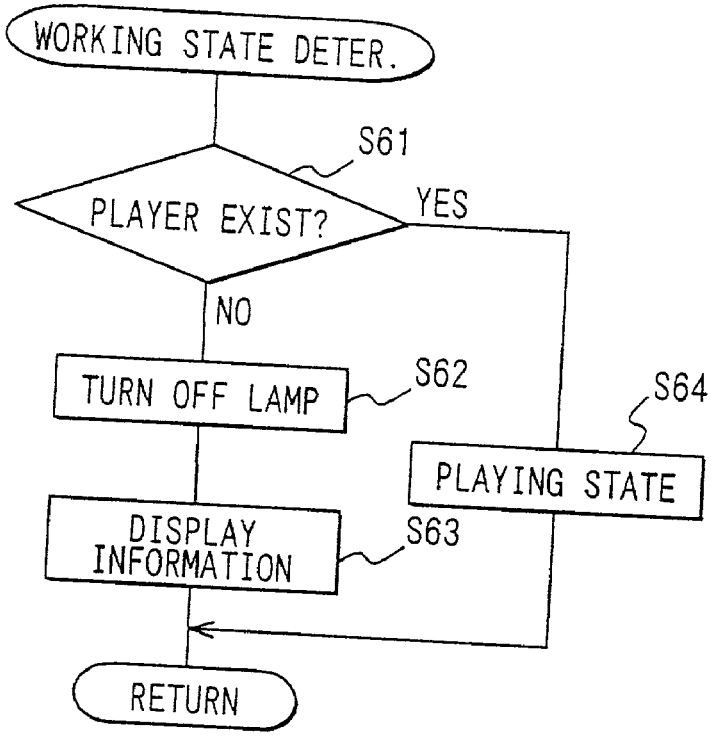
WORKING STATE DETER.
S61
PLAYER EXIST?
YES
NO
TURN OFF LAMP
S62
S64
PLAYING STATE
DISPLAY INFORMATION
S63
RETURN

FIG. 27

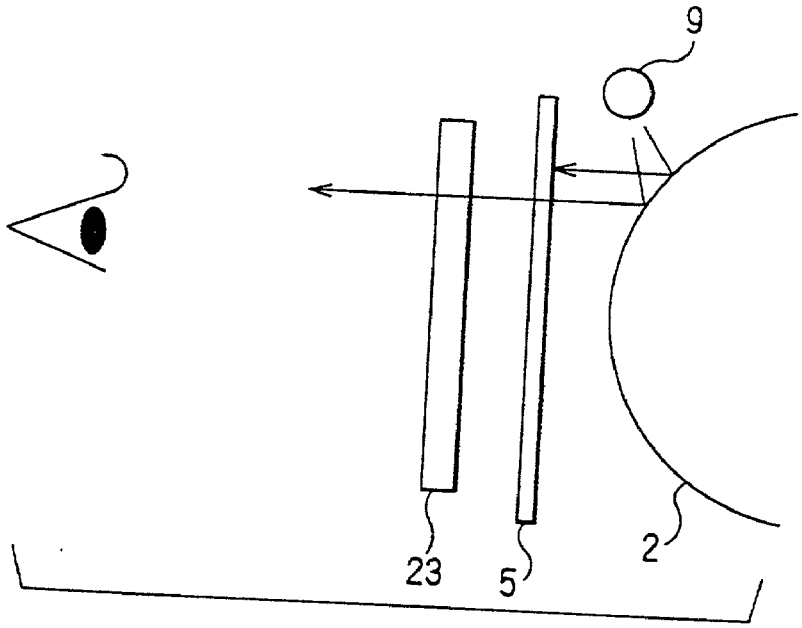
9
23
5
2