FIG. 4

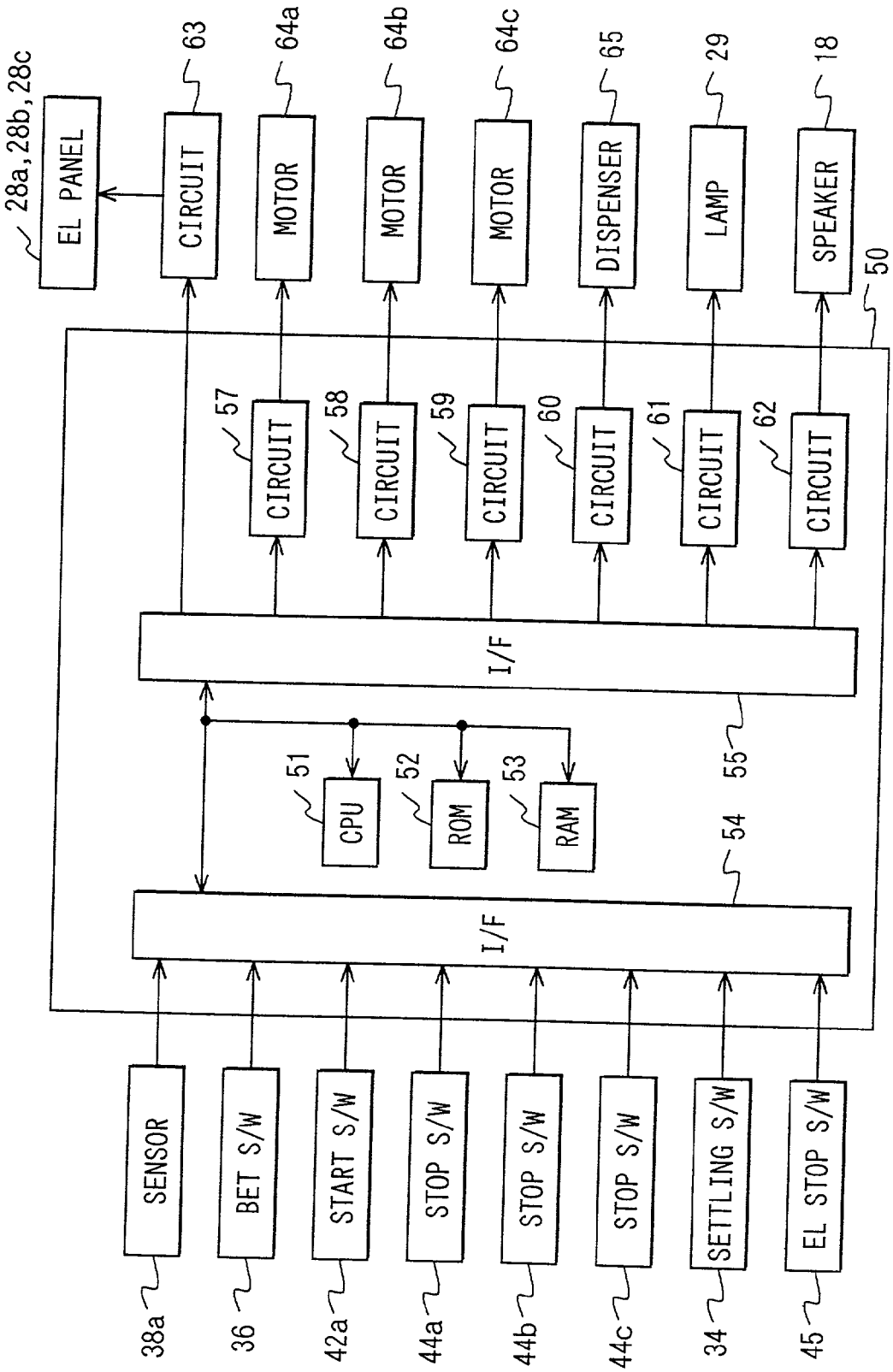
28a, 28b, 28c
EL PANEL
63
CIRCUIT
64a
MOTOR
64b
MOTOR
64c
MOTOR
65
DISPENSER
29
LAMP
18
SPEAKER
50
57
CIRCUIT
58
CIRCUIT
59
CIRCUIT
60
CIRCUIT
61
CIRCUIT
62
CIRCUIT
I/F
55
51
CPU
52
ROM
53
RAM
54
I/F
SENSOR
BET S/W
START S/W
STOP S/W
STOP S/W
STOP S/W
SETTLING S/W
EL STOP S/W
38a
36
42a
44a
44b
44c
34
45