FIG. 5

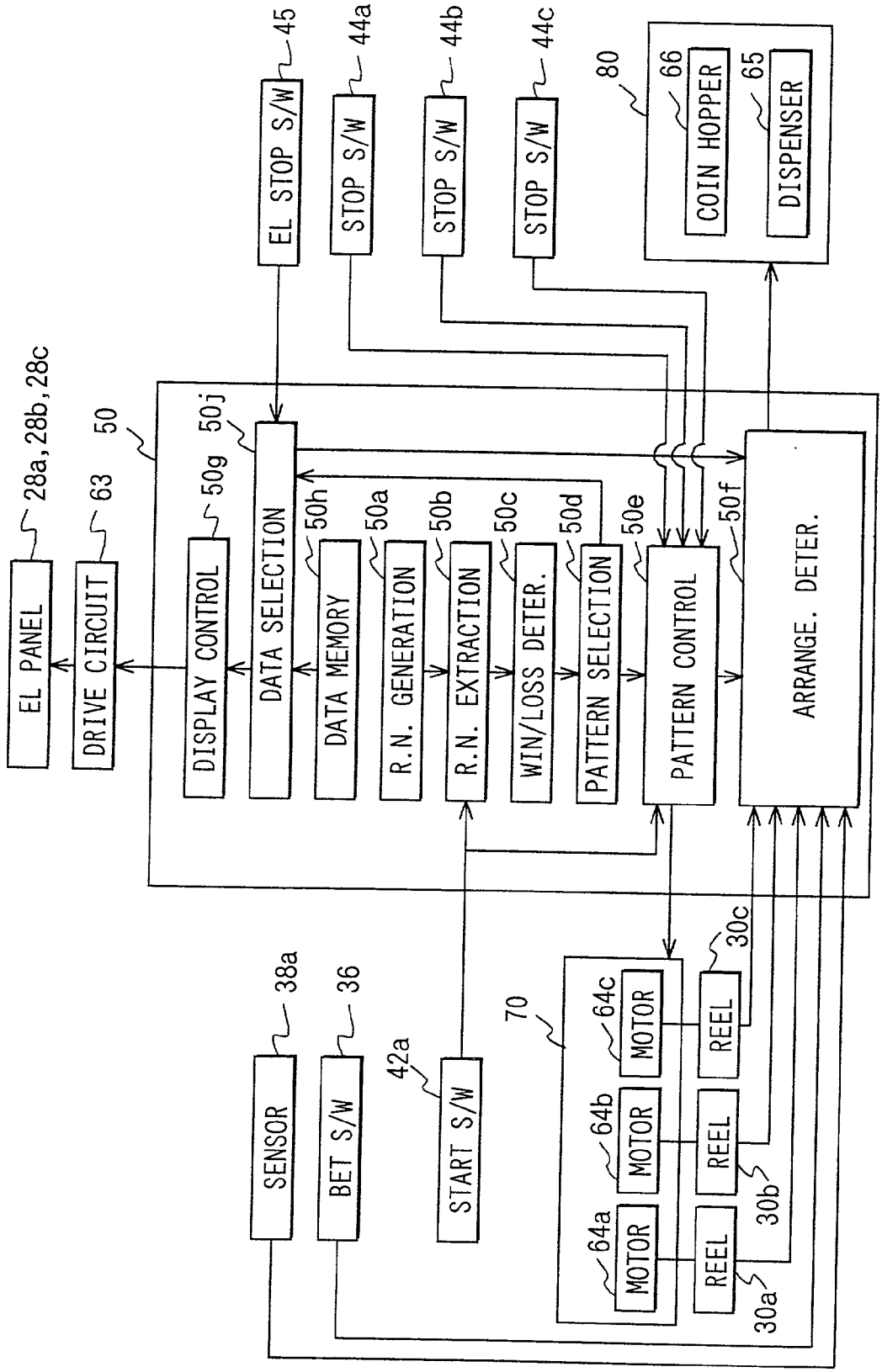
EL PANEL
28a, 28b, 28c
DRIVE CIRCUIT
63
50
DISPLAY CONTROL
50g
DATA SELECTION
50j
DATA MEMORY
50h
R.N. GENERATION
50a
R.N. EXTRACTION
50b
WIN/LOSS DETER.
50c
PATTERN SELECTION
50d
PATTERN CONTROL
50e
ARRANGE. DETER.
50f
EL STOP S/W
45
STOP S/W
44a
STOP S/W
44b
STOP S/W
44c
80
COIN HOPPER
66
DISPENSER
65
SENSOR
38a
BET S/W
36
START S/W
42a
70
MOTOR
64a
MOTOR
64b
MOTOR
64c
REEL
30a
REEL
30b
REEL
30c