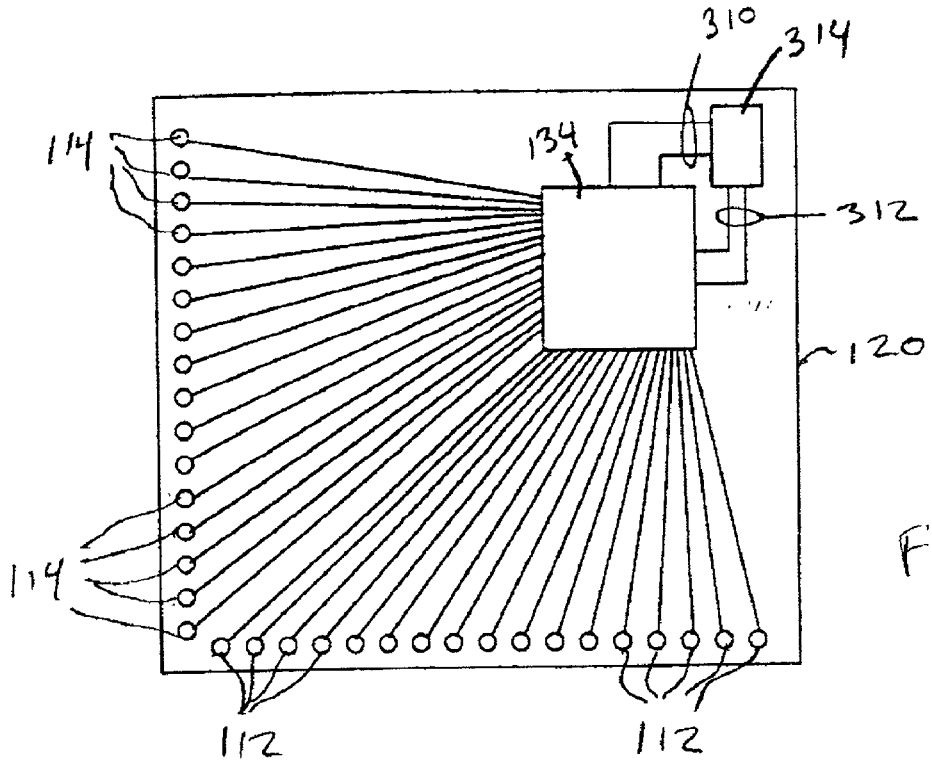

FIG 3

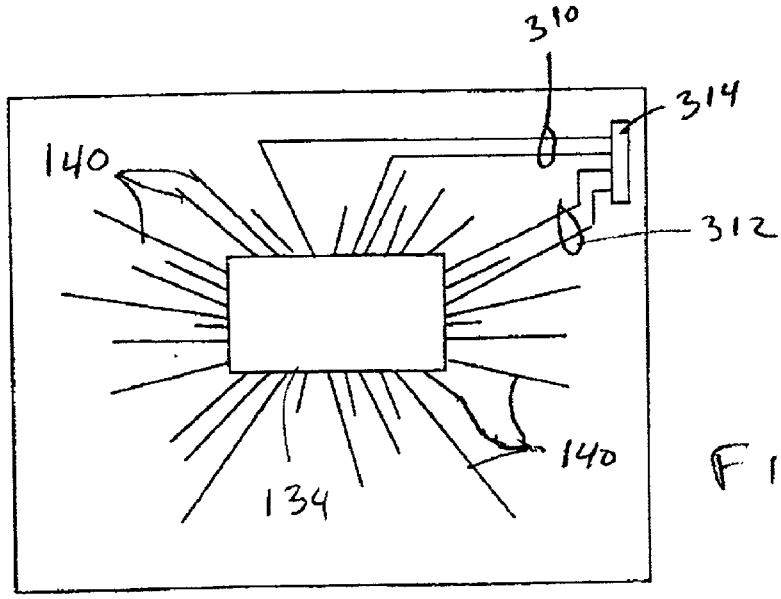

FIG 4