FIG.3A
(PRIOR ART)

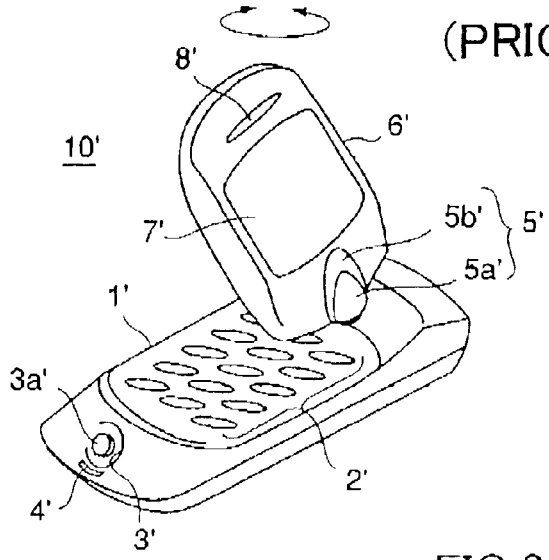

FIG.3B (PRIOR ART)

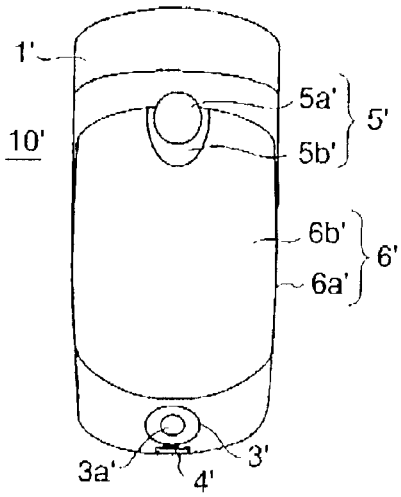
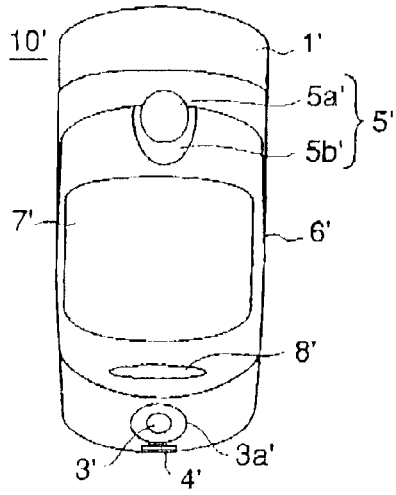
FIG.3C (PRIOR ART)