FIG. 8
PRIOR ART

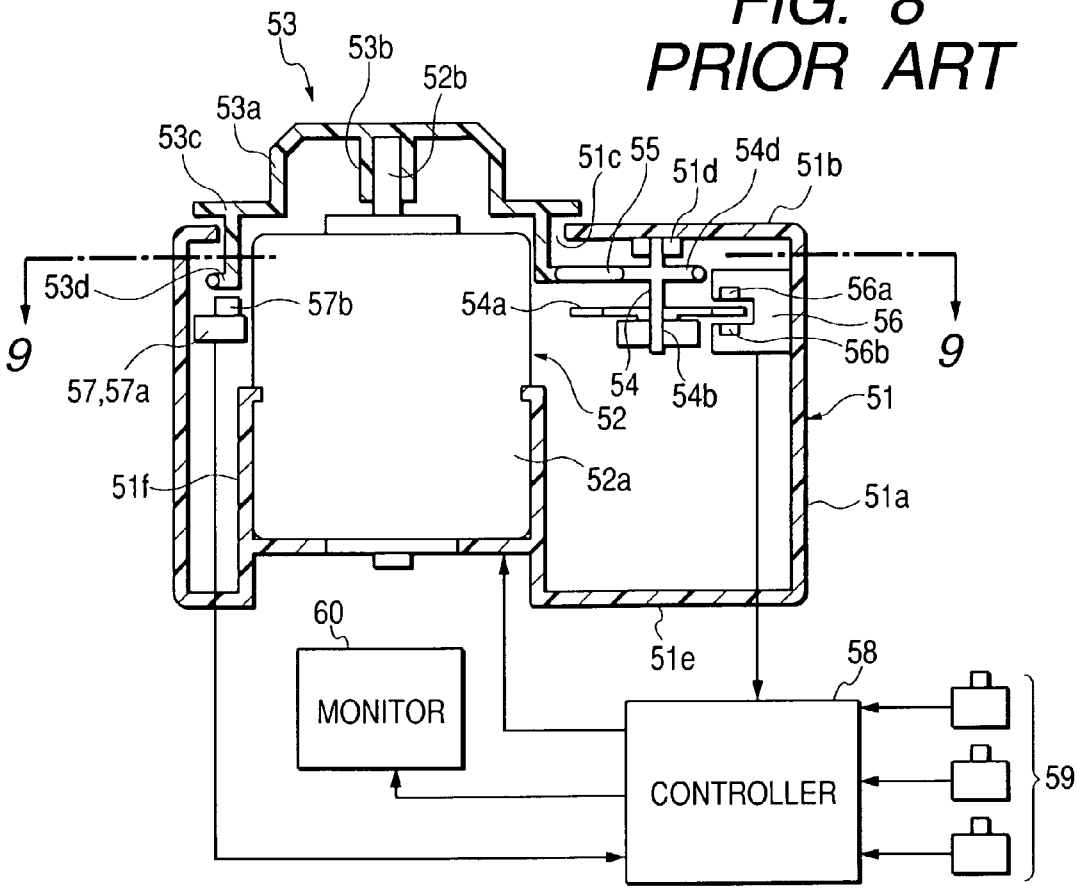
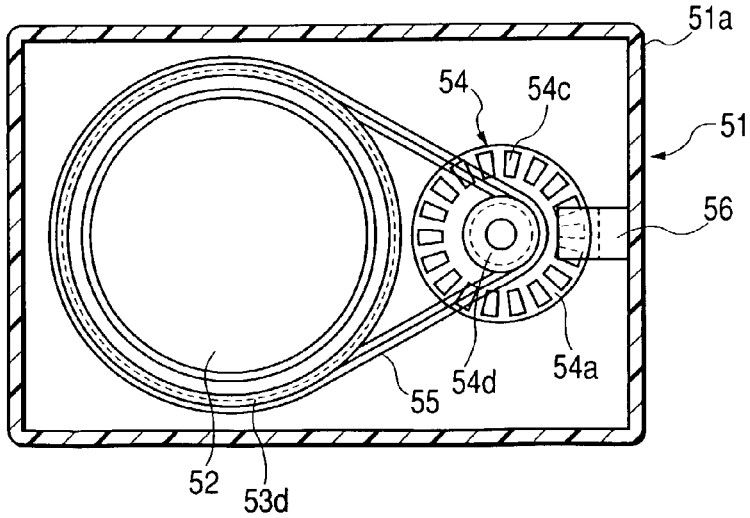
FIG. 9
PRIOR ART