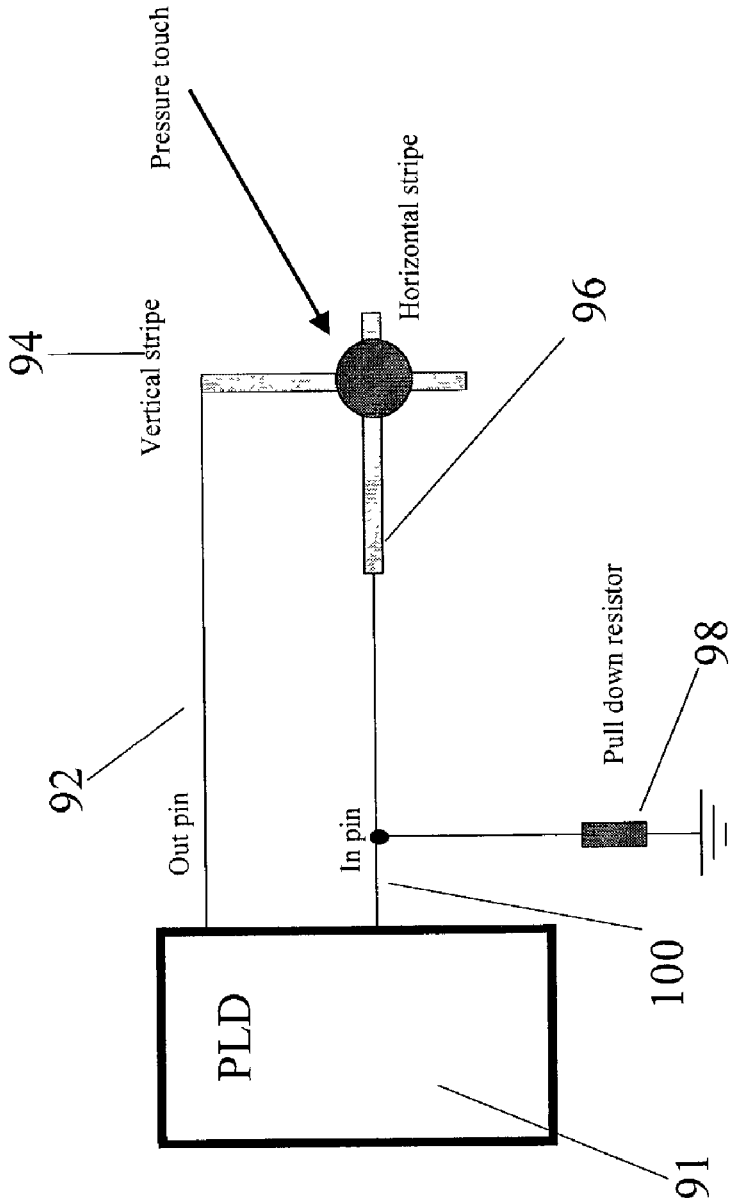
Pressure touch
Horizontal stripe
Vertical stripe
94
96
92
Out pin
In pin
Pull down resistor
98
100
PLD
91

Fig. 8