FIG. 5

(TOP PLAN VIEW)

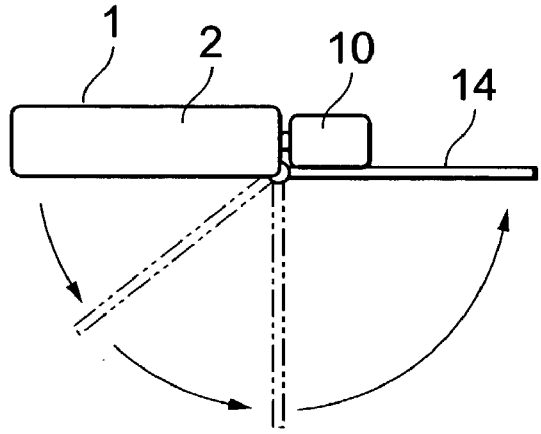

(b)

(BACK VIEW)

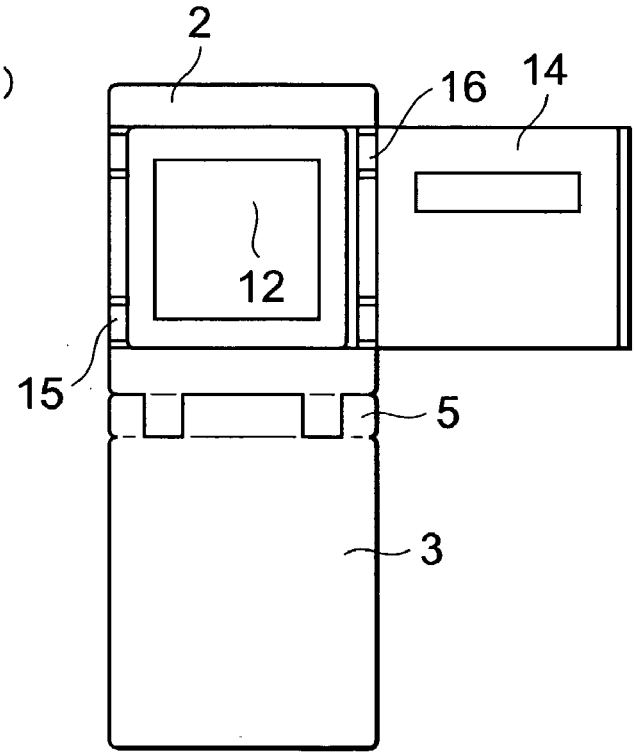

(a)