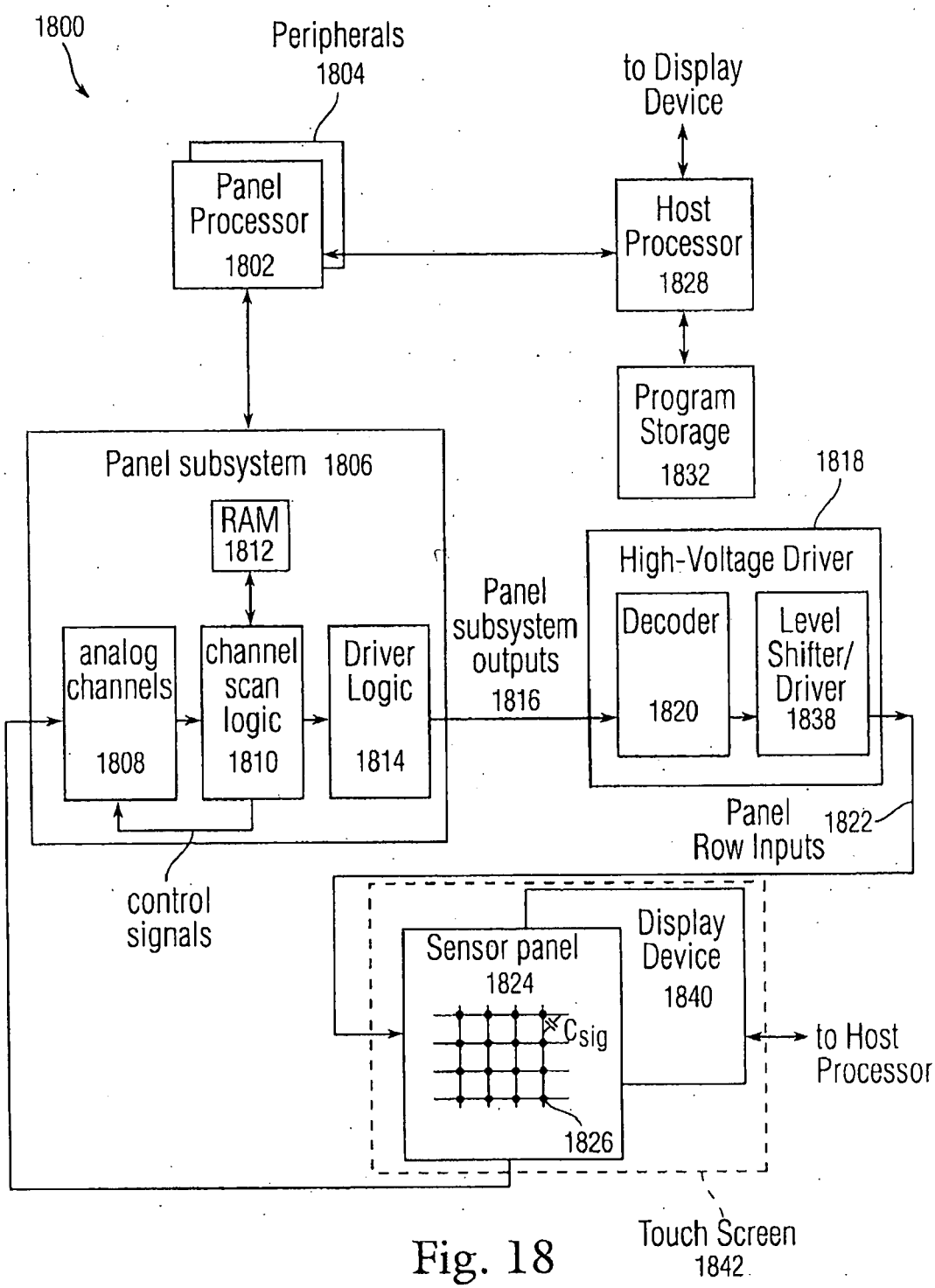
1800
Peripherals
1804
to Display
Device
Panel
Processor
1802
Host
Processor
1828
Program
Storage
1832
Panel subsystem 1806
RAM
1812
1818
High-Voltage Driver
Panel
subsystem
outputs
1816
Decoder
1820
Level
Shifter/
Driver
1838
analog
channels
1808
channel
scan
logic
1810
Driver
Logic
1814
Panel
Row Inputs
1822
control
signals
Sensor panel
1824
Csig
Display
Device
1840
to Host
Processor
1826
Touch Screen
1842

Fig. 18