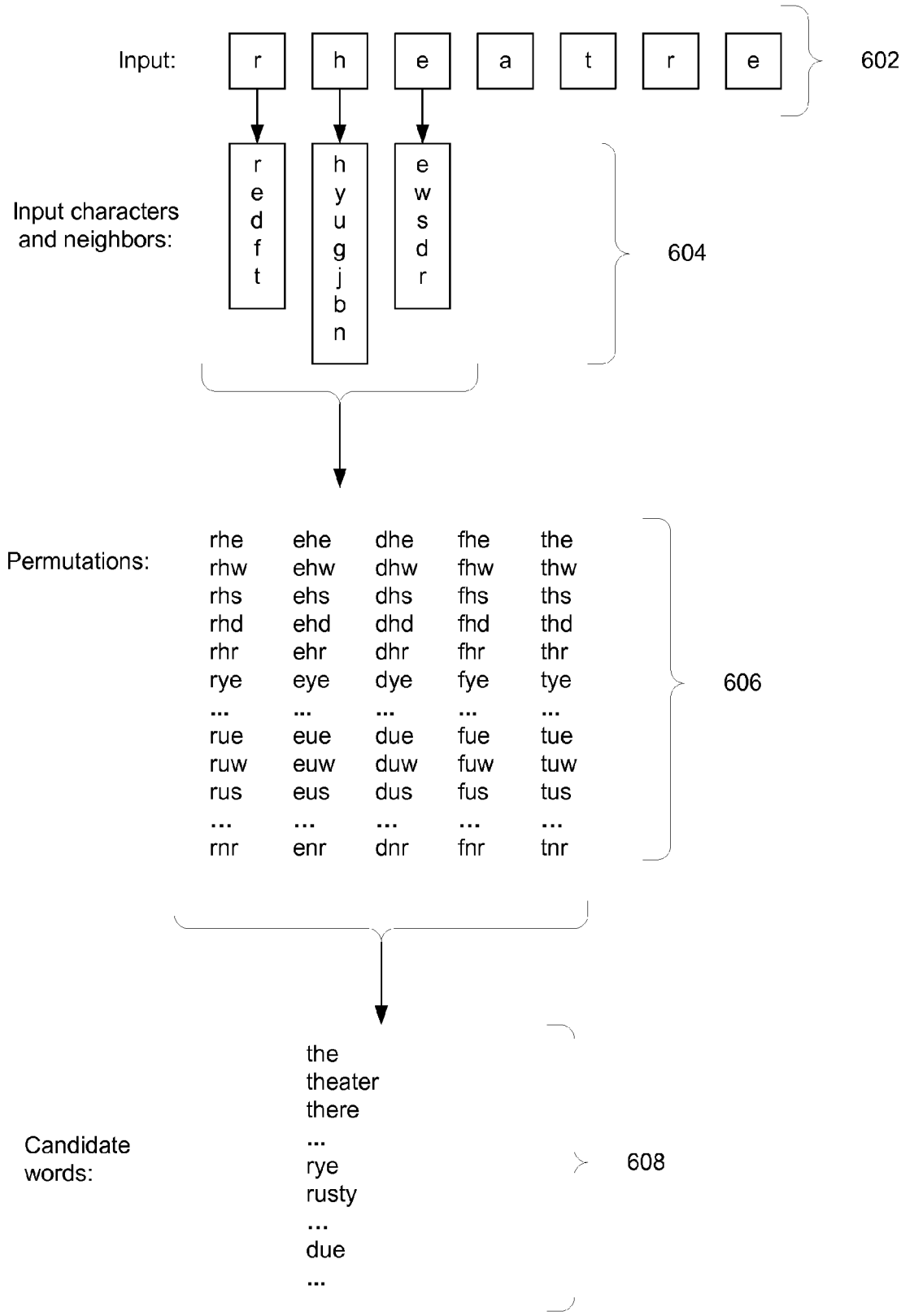
Input:
r h e a t r e
602
Input characters and neighbors:
r e d f t
h y u g j b n
e w s d r
604
Permutations:
rhe ehe dhe fhe the
rhw ehw dhw fhw thw
rhs ehs dhs fhs ths
rhd ehd dhd fhd thd
rhr ehr dhr fhr thr
rye eye dye fye tye
... ...
rue eue due fue tue
ruw euw duw fuw tuw
rus eus dus fus tus
... ...
rnr enr dnr fnr tnr
606
Candidate words:
the
theater
there
...
rye
rusty
...
due
...
608

FIG. 6