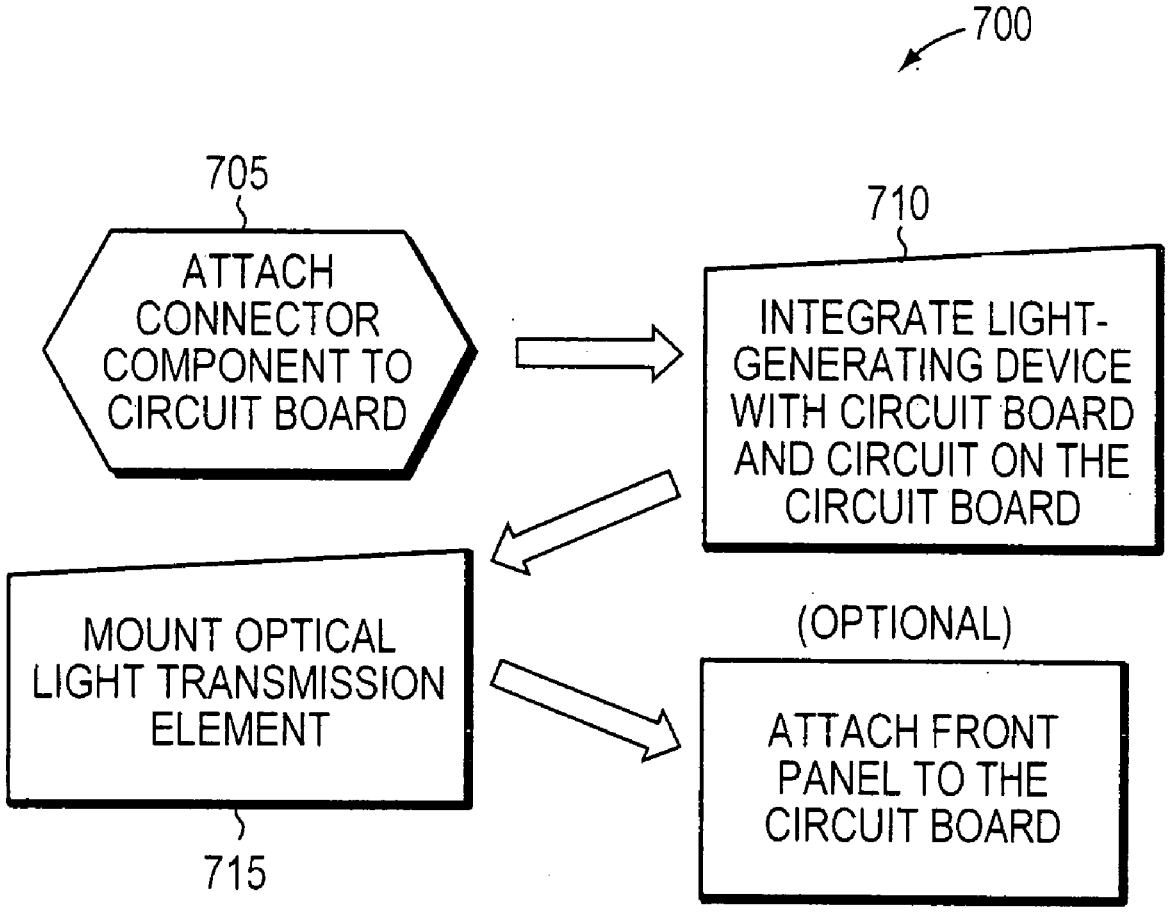
700
705
ATTACH CONNECTOR COMPONENT TO CIRCUIT BOARD
710
INTEGRATE LIGHT-GENERATING DEVICE WITH CIRCUIT BOARD AND CIRCUIT ON THE CIRCUIT BOARD
MOUNT OPTICAL LIGHT TRANSMISSION ELEMENT
715
(OPTIONAL)
ATTACH FRONT PANEL TO THE CIRCUIT BOARD

FIG. 7