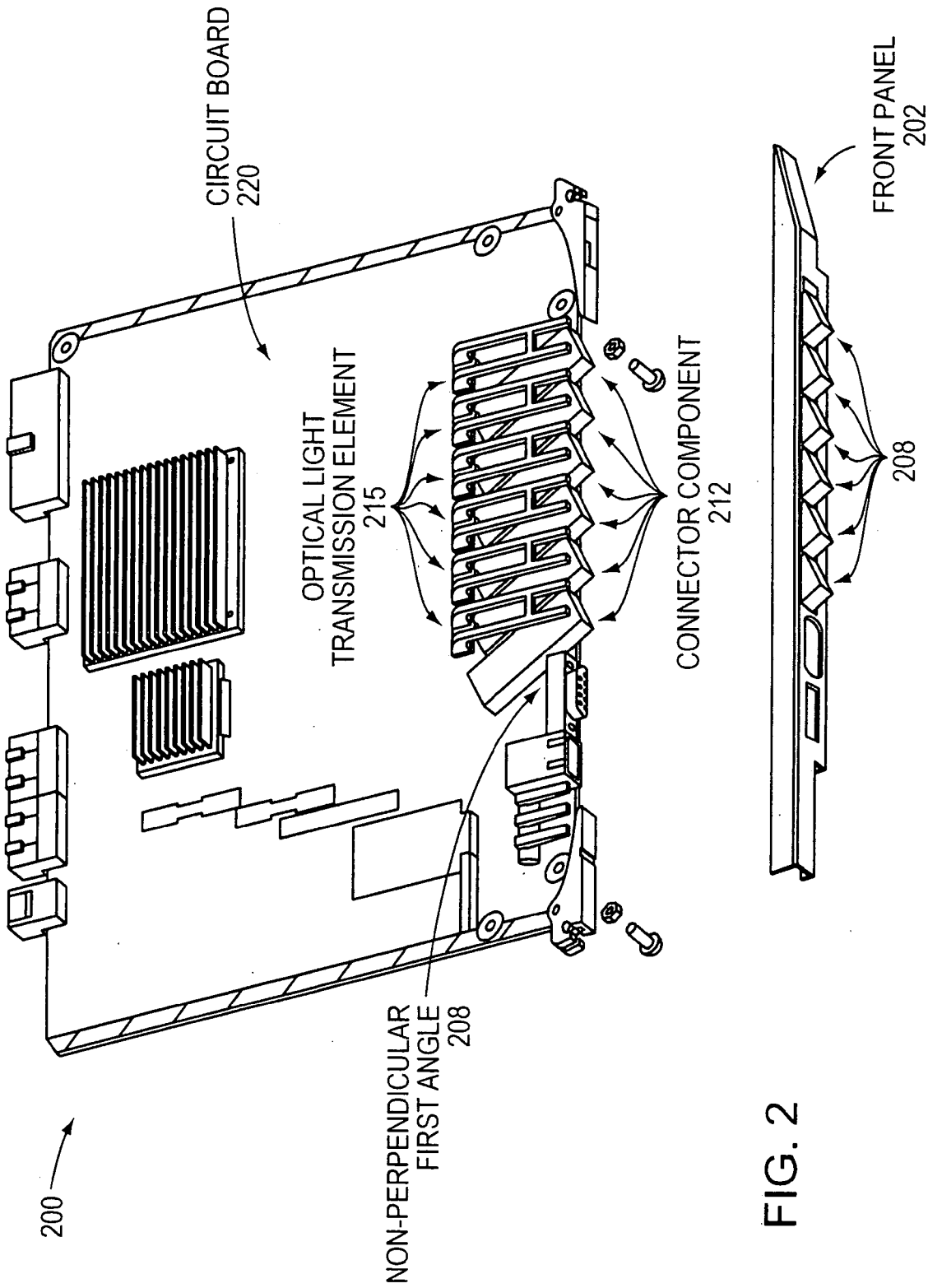
CIRCUIT BOARD
220
OPTICAL LIGHT
TRANSMISSION ELEMENT
215
CONNECTOR COMPONENT
212
FRONT PANEL
202
208
NON-PERPENDICULAR
FIRST ANGLE
208
200

FIG. 2