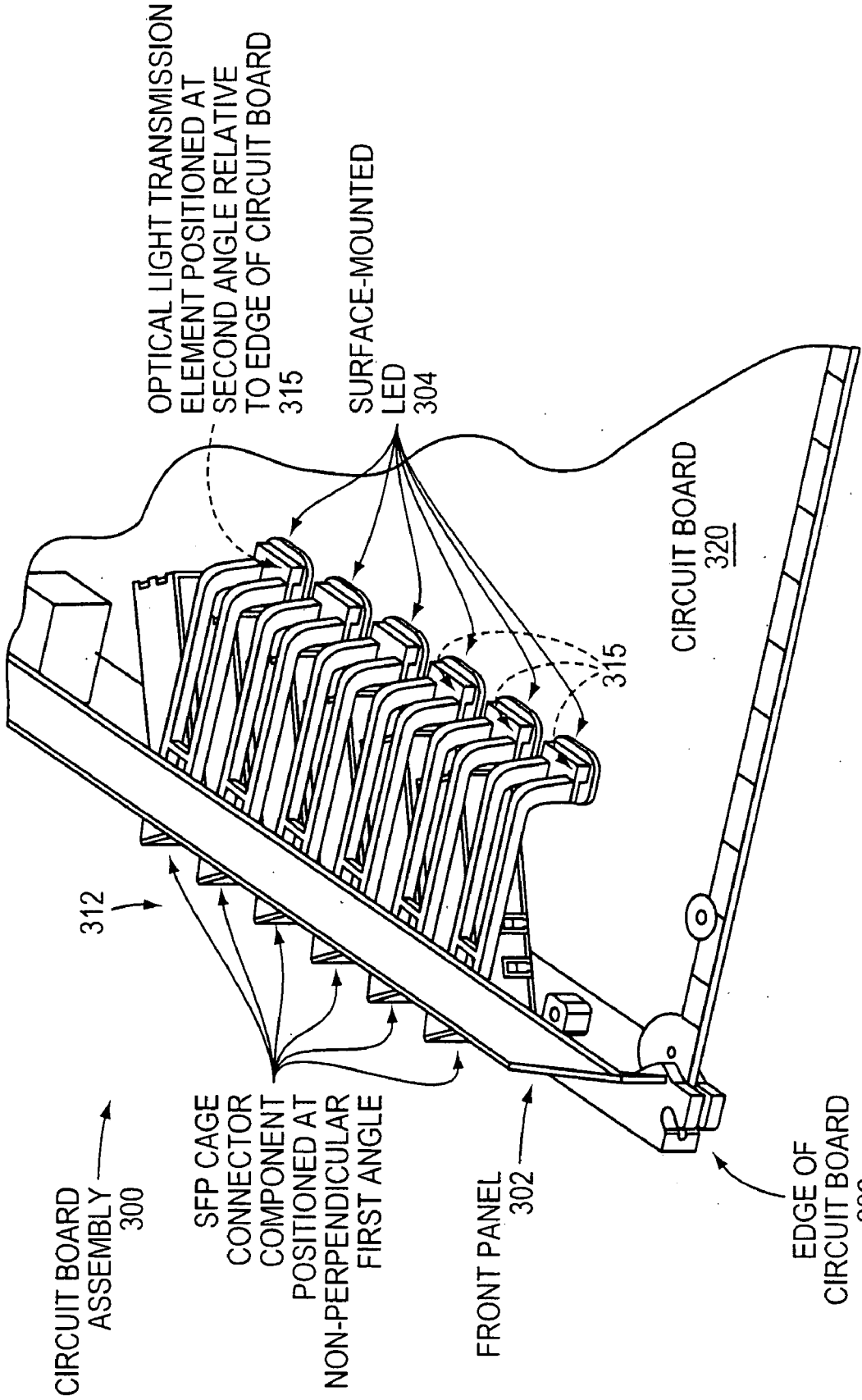
OPTICAL LIGHT TRANSMISSION ELEMENT POSITIONED AT SECOND ANGLE RELATIVE TO EDGE OF CIRCUIT BOARD 315
SURFACE-MOUNTED LED 304
CIRCUIT BOARD 320
315
312
CIRCUIT BOARD ASSEMBLY 300
SFP CAGE CONNECTOR COMPONENT POSITIONED AT NON-PERPENDICULAR FIRST ANGLE
FRONT PANEL 302
EDGE OF CIRCUIT BOARD 306

FIG. 3A