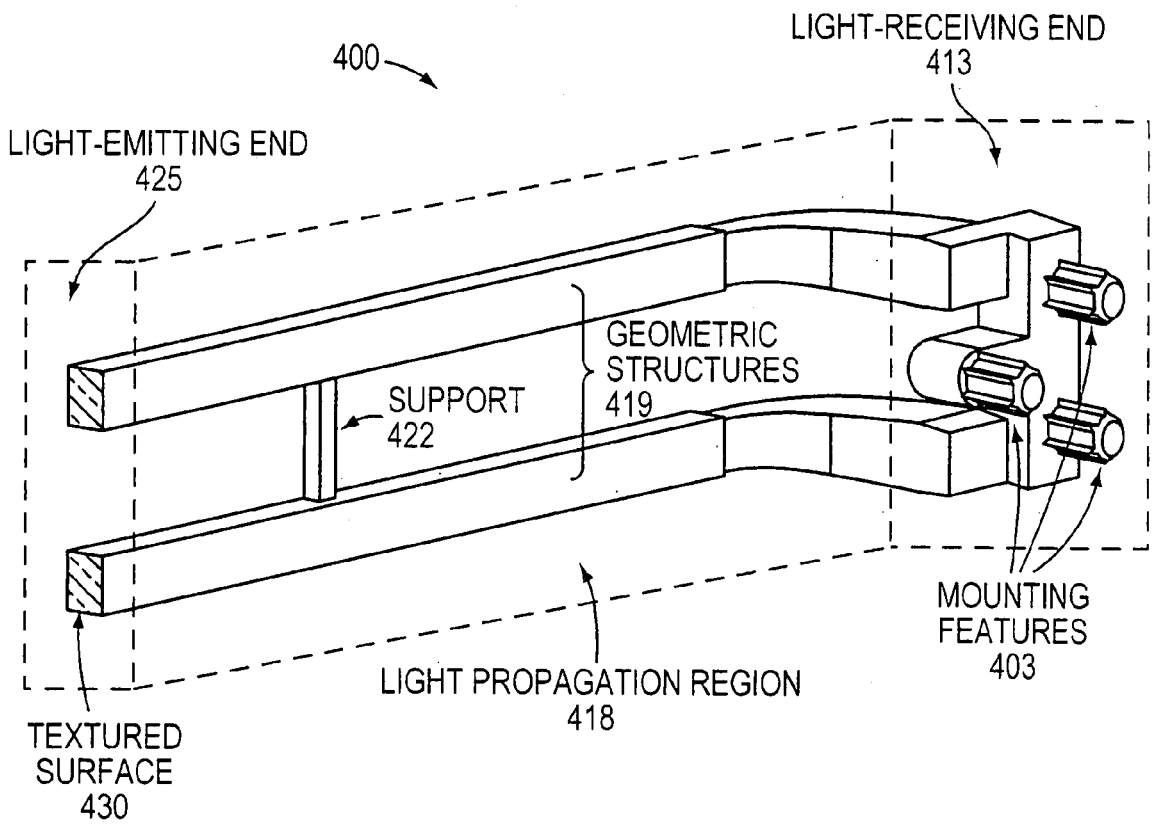
400
LIGHT-RECEIVING END
413
LIGHT-EMITTING END
425
GEOMETRIC
STRUCTURES
419
SUPPORT
422
MOUNTING
FEATURES
403
LIGHT PROPAGATION REGION
418
TEXTURED
SURFACE
430

FIG. 4B