FIG. 2

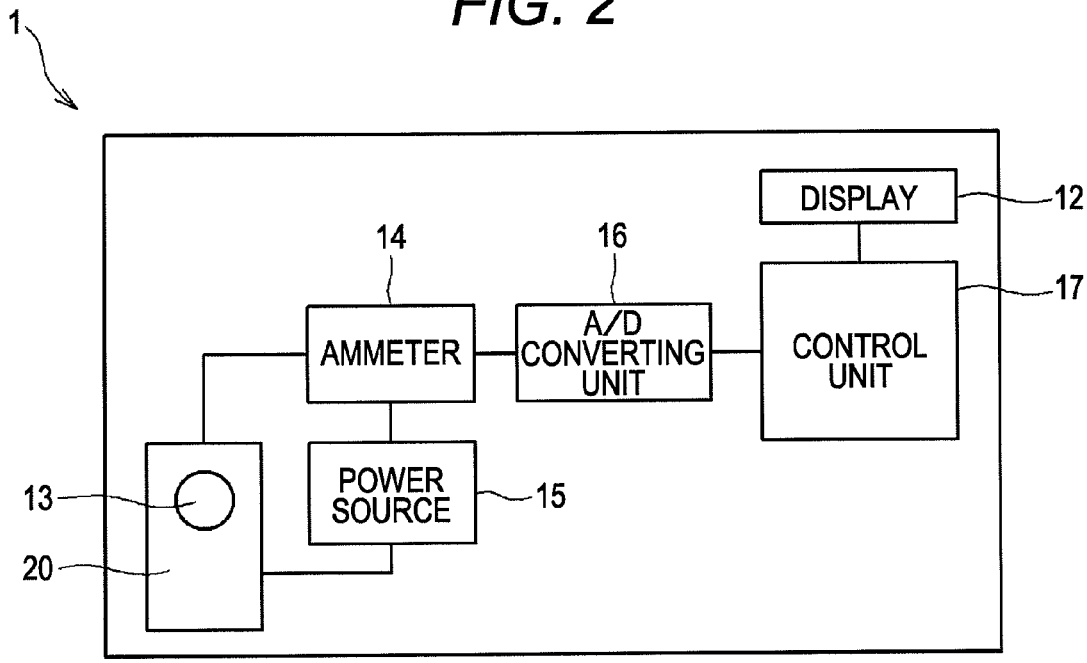
1
DISPLAY
12
14
16
17
AMMETER
A/D CONVERTING UNIT
CONTROL UNIT
POWER SOURCE
15
13
20

FIG. 3

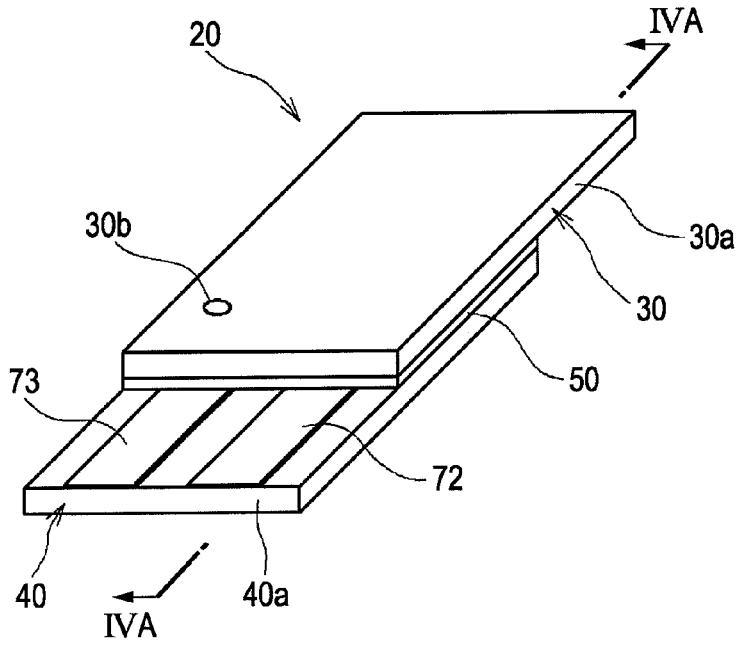
20
IVA
30b
30a
30
50
73
72
40
IVA
40a