FIG. 2

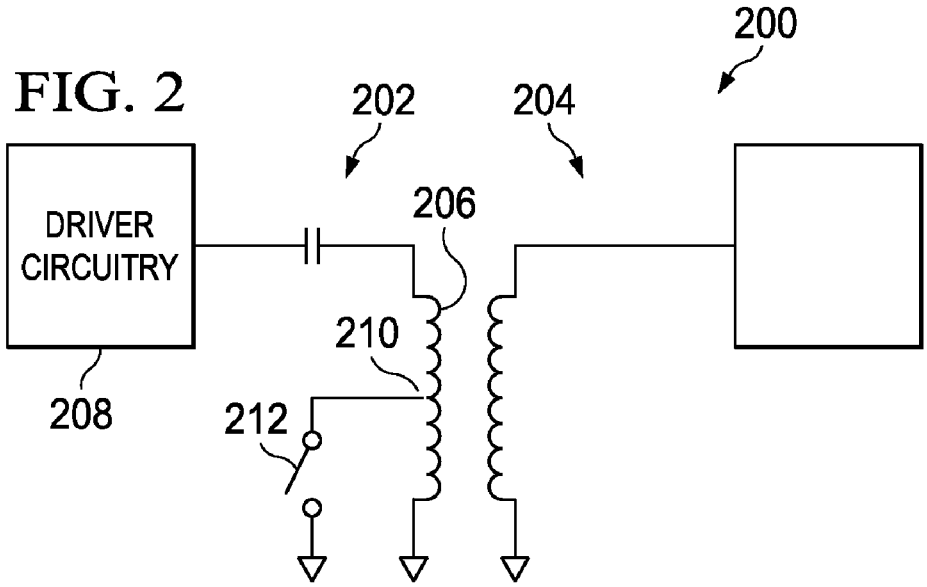
200
202
204
206
DRIVER CIRCUITRY
210
208
212

FIG. 3

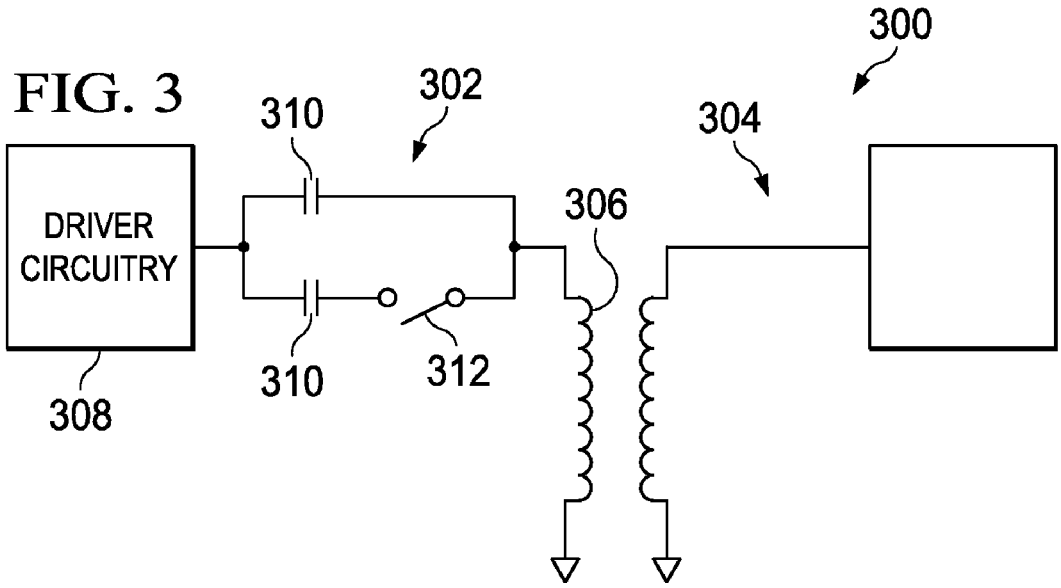
300
302
310
304
306
DRIVER CIRCUITRY
310
312
308