US 20150314958A1

(19) United States

(12) Patent Application Publication

LE PALUD et al.

(10) Pub. No.: US 2015/0314958 A1

(43) Pub. Date: Nov. 5, 2015

(54) **RUBBISH COLLECTION VEHICLE WITH AN IMPROVED CONTAINER LIFTER**

(71) Applicant: **PB ENVIRONNEMENT**, Lambesc (FR)

(72) Inventors: **Frédéric LE PALUD**, Vitrolles (FR); **Philippe QUARTERONI**, Lancon De Provence (FR); **Christian REVERDY**, La Ciotat (FR)

(73) Assignee: **PB ENVIRONNEMENT**, Lambesc (FR)

(21) Appl. No.: **14/646,189**

(22) PCT Filed: **Nov. 19, 2013**

(86) PCT No.: **PCT/FR2013/052778**

§ 371 (c)(1),
(2) Date: **May 20, 2015**

(30) **Foreign Application Priority Data**

Nov. 20, 2012 (FR) 1261022

Publication Classification

(51) **Int. Cl.**
B65F 3/04 (2006.01)

(52) **U.S. Cl.**
CPC ***B65F 3/046*** (2013.01)

(57) **ABSTRACT**
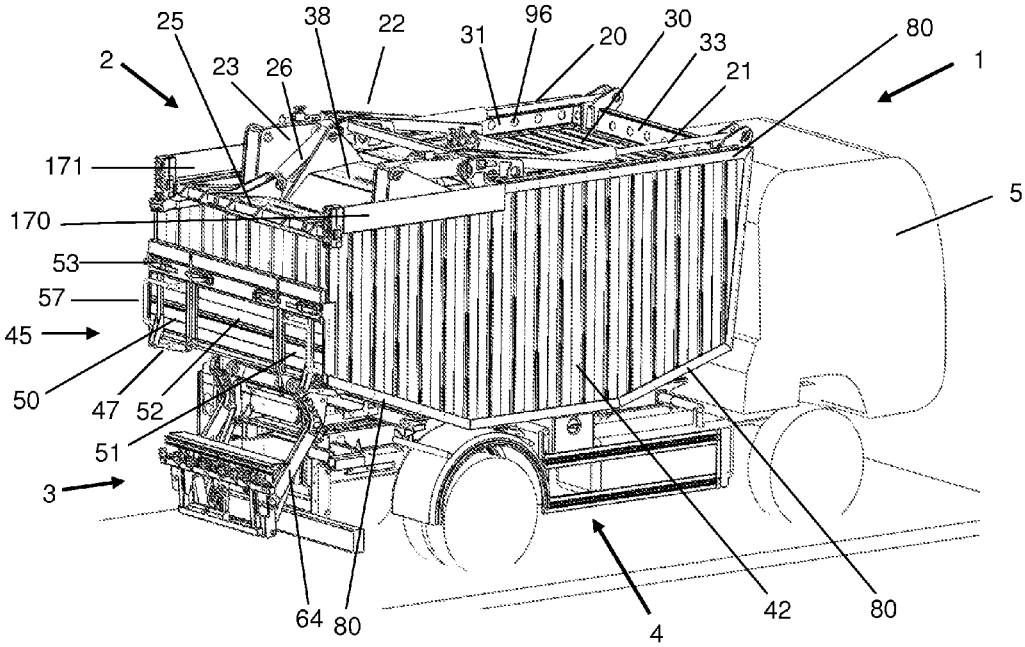
A container lifter and a low-encumbrance rubbish collection bin that can be used for a rear loading rubbish collection vehicle.