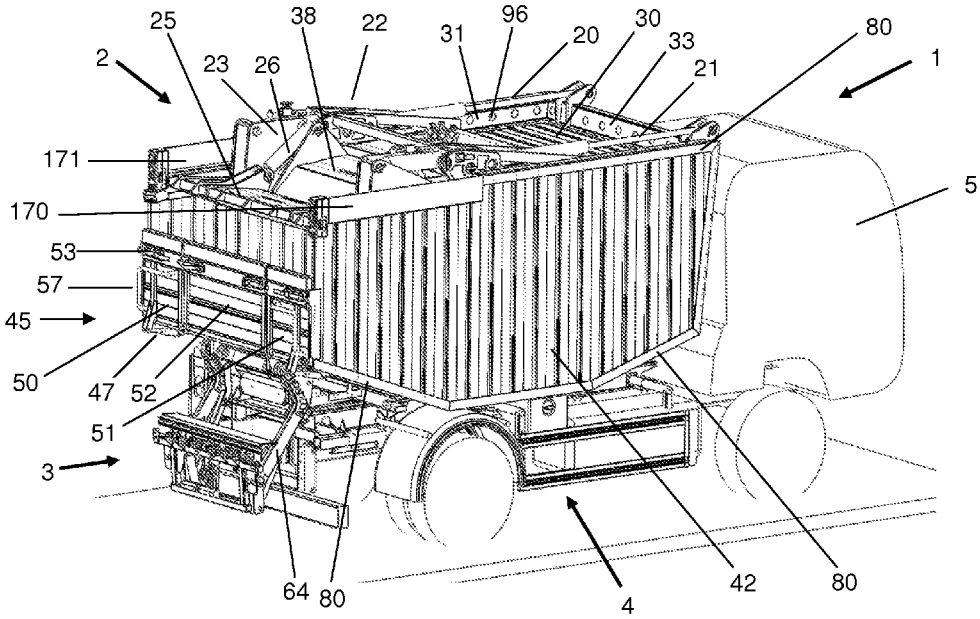

Figure 1

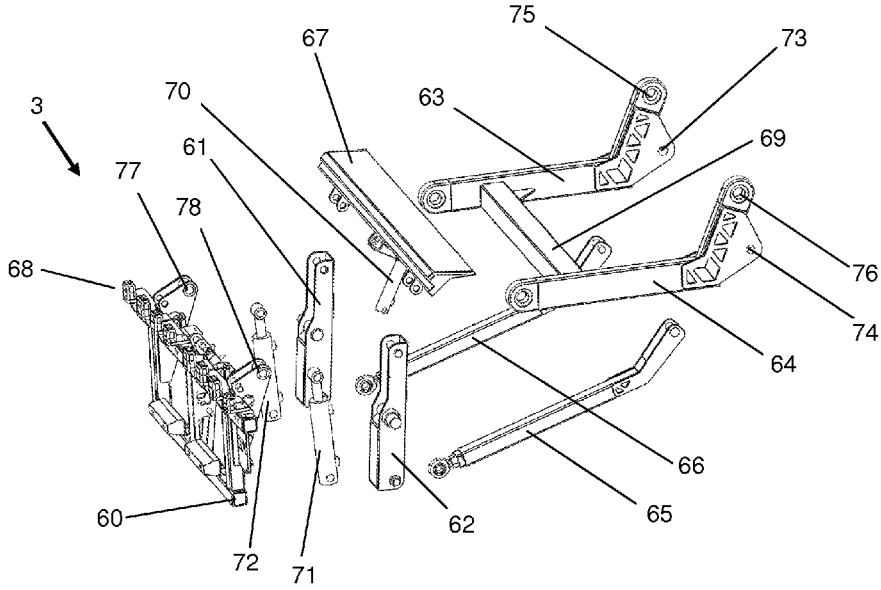

Figure 2