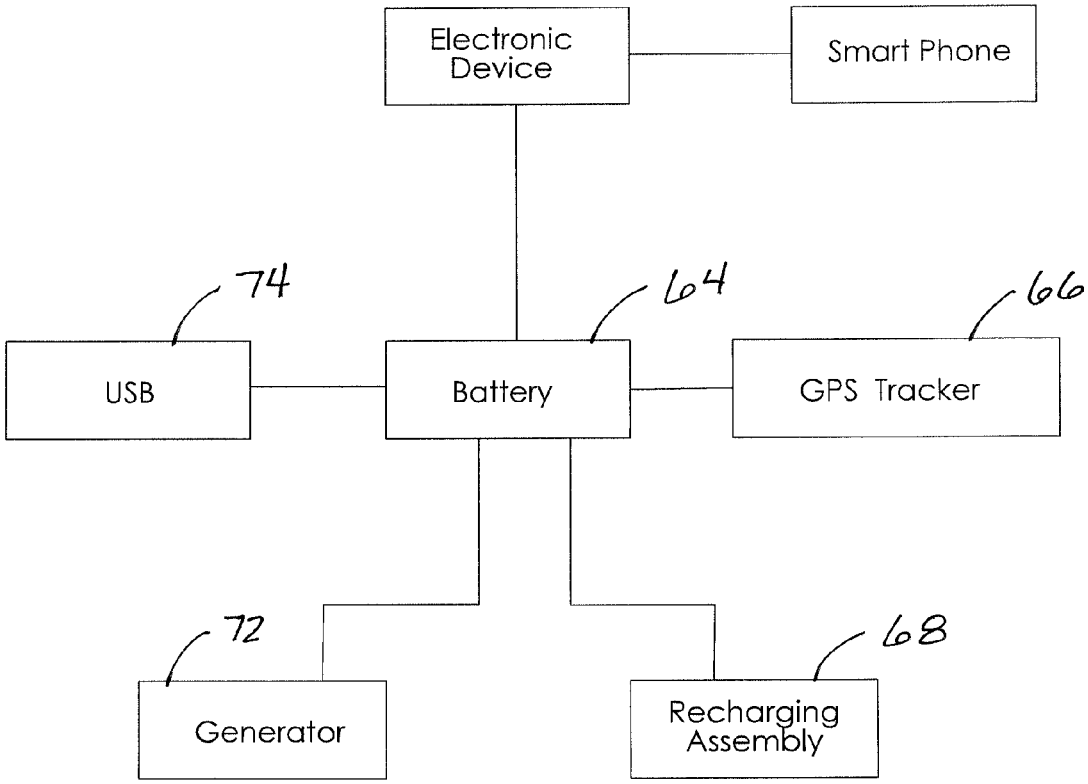
Electronic Device
Smart Phone
74
64
66
USB
Battery
GPS Tracker
72
68
Generator
Recharging Assembly

Fig. 5