US 20170162758A1

(19) United States

(12) Patent Application Publication

(10) Pub. No.: US 2017/0162758 A1

(43) Pub. Date: Jun. 8, 2017

Weiler et al.

(54) LED BASED DEVICE WITH WIDE COLOR GAMUT

(71) Applicant: **Koninklijke Philips N.V.**, Eindhoven (NL)

(72) Inventors: **Volker Weiler**, Aachen (DE); **Peter Josef Schmidt**, Aachen (DE); **Hans-Helmut Bechtel**, Roetgen (DE)

(21) Appl. No.: **15/423,495**

(22) Filed: **Feb. 2, 2017**

Related U.S. Application Data

(63) Continuation of application No. 14/439,253, filed on Apr. 29, 2015, now Pat. No. 9,564,557, filed as application No. PCT/IB2013/059535 on Oct. 22, 2013.

(60) Provisional application No. 61/721,284, filed on Nov. 1, 2012.

Publication Classification

(51) **Int. Cl.**

H01L 33/50	(2006.01)
G02F 1/1335	(2006.01)
F21V 9/08	(2006.01)
C09K 11/08	(2006.01)
C09K 11/02	(2006.01)
C09K 11/77	(2006.01)
C09K 11/61	(2006.01)
H01L 25/075	(2006.01)
F21V 9/16	(2006.01)

(52) **U.S. Cl.**

CPC ***H01L 33/504*** (2013.01); ***H01L 25/0753*** (2013.01); ***G02F 1/133603*** (2013.01); ***F21V 9/08*** (2013.01); ***F21V 9/16*** (2013.01); ***C09K 11/025*** (2013.01); ***C09K 11/7734*** (2013.01); ***C09K 11/617*** (2013.01); ***C09K 11/0883*** (2013.01); *G02F 2001/133614* (2013.01); *F21Y 2115/10* (2016.08)

(57) **ABSTRACT**
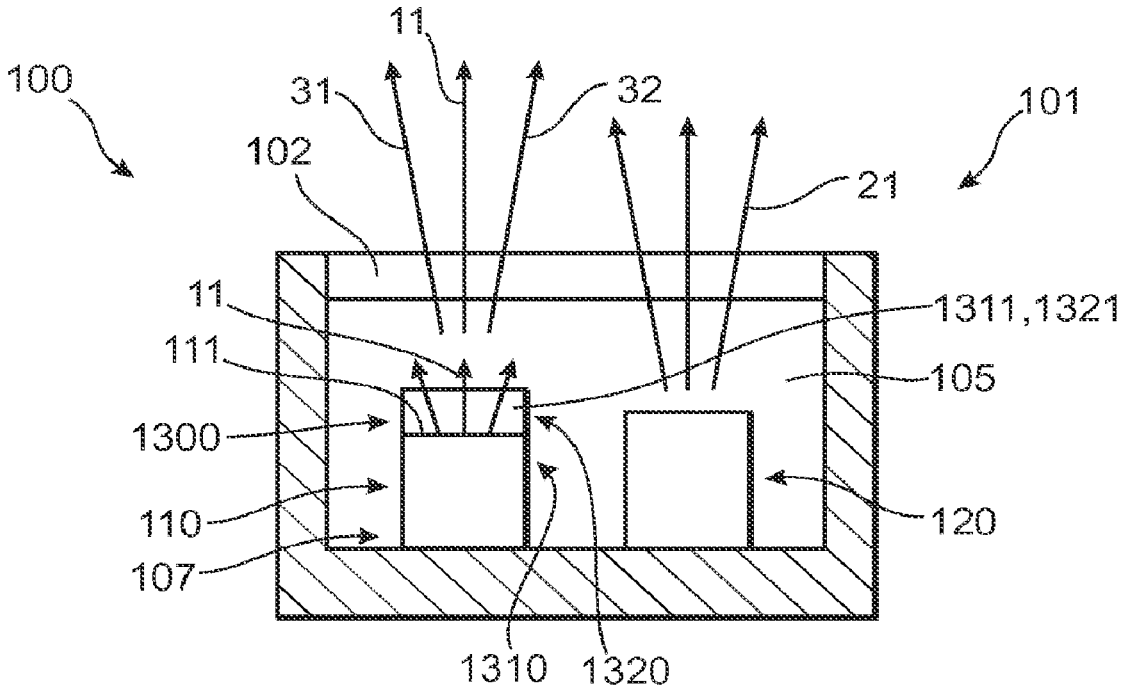
The invention provides a lighting unit comprising a source of blue light, a source of green light, a first source of red light comprising a first red luminescent material, configured to provide red light with a broad band spectral light distribution, and a second source of red light comprising a second red luminescent material, configured to provide red light with a spectral light distribution comprising one or more red emission lines. Especially, the first red luminescent material comprises $(Mg,Ca,Sr)AlSiN_3$:Eu and/or $(Ba,Sr,Ca)_2Si_{5-x}Al_xO_xN_{8-x}$:Eu, and the second red luminescent material comprises K_2SiF_6:Mn.