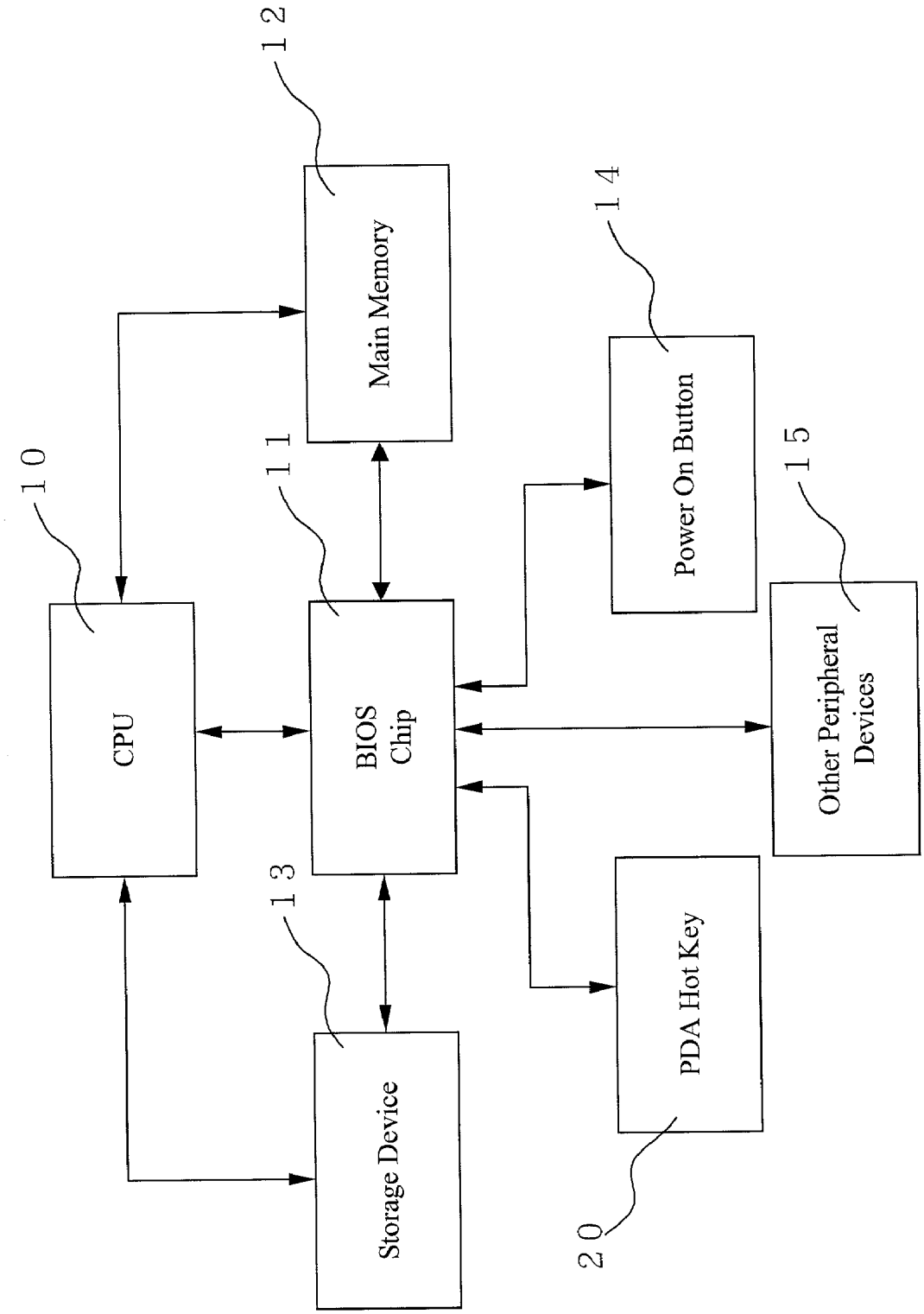
10
CPU
11
BIOS Chip
12
Main Memory
13
Storage Device
14
Power On Button
15
Other Peripheral Devices
20
PDA Hot Key

FIG. 2