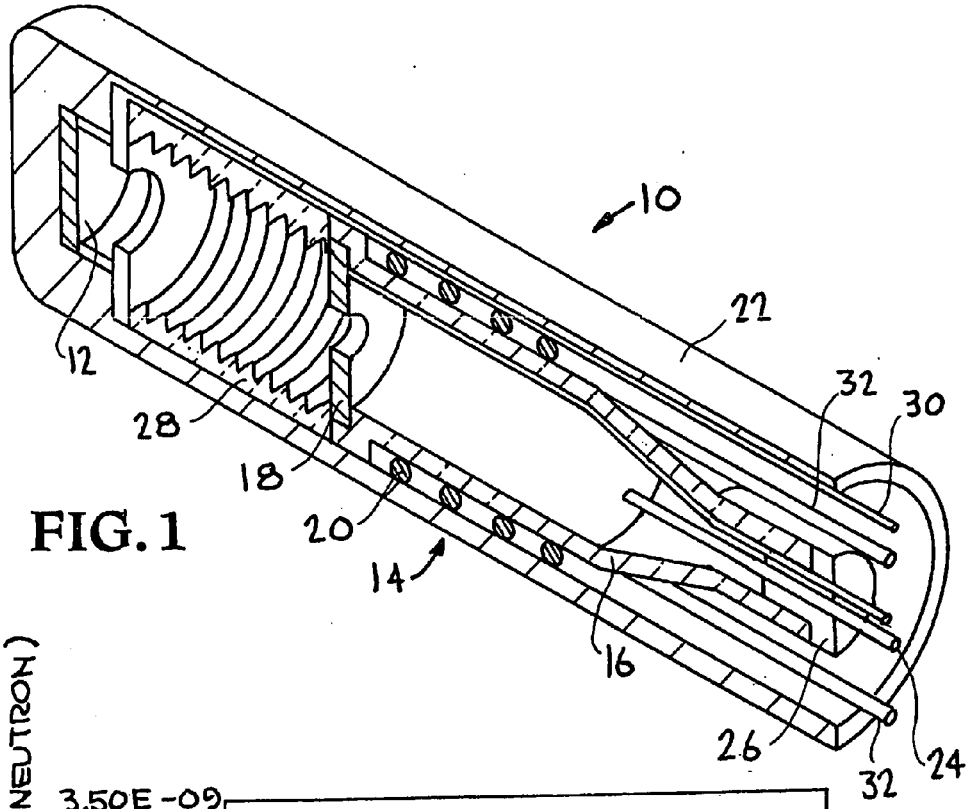
10
12
14
16
18
20
22
24
26
28
30
32
32

FIG. 1

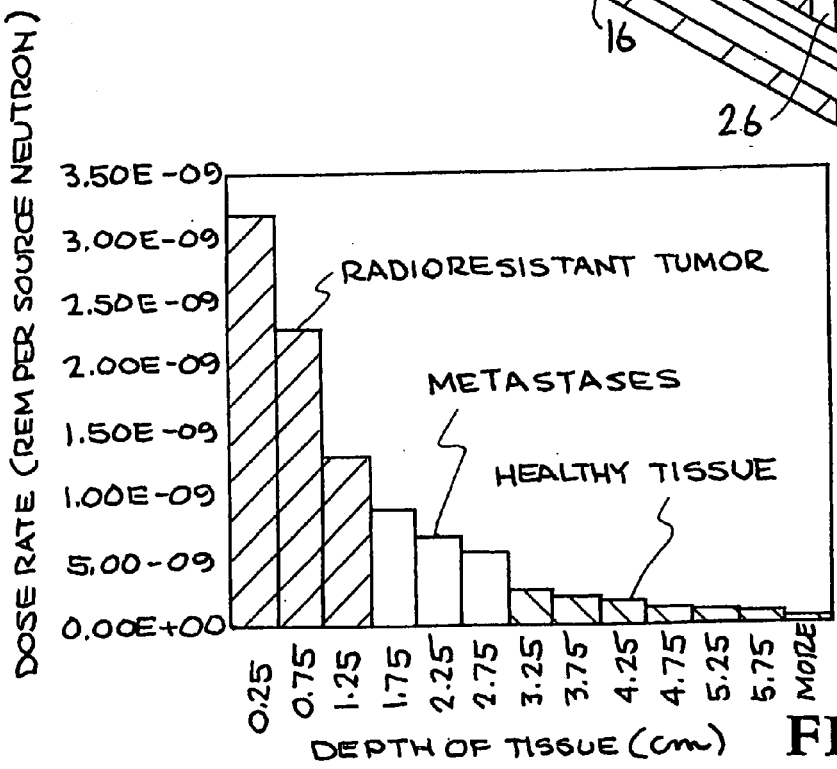
DOSE RATE (REM PER SOURCE NEUTRON)
3.50E-09
3.00E-09
2.50E-09
2.00E-09
1.50E-09
1.00E-09
5.00-09
0.00E+00
RADIORESISTANT TUMOR
METASTASES
HEALTHY TISSUE
0.25
0.75
1.25
1.75
2.25
2.75
3.25
3.75
4.25
4.75
5.25
5.75
MORE
DEPTH OF TISSUE (cm)

FIG. 2