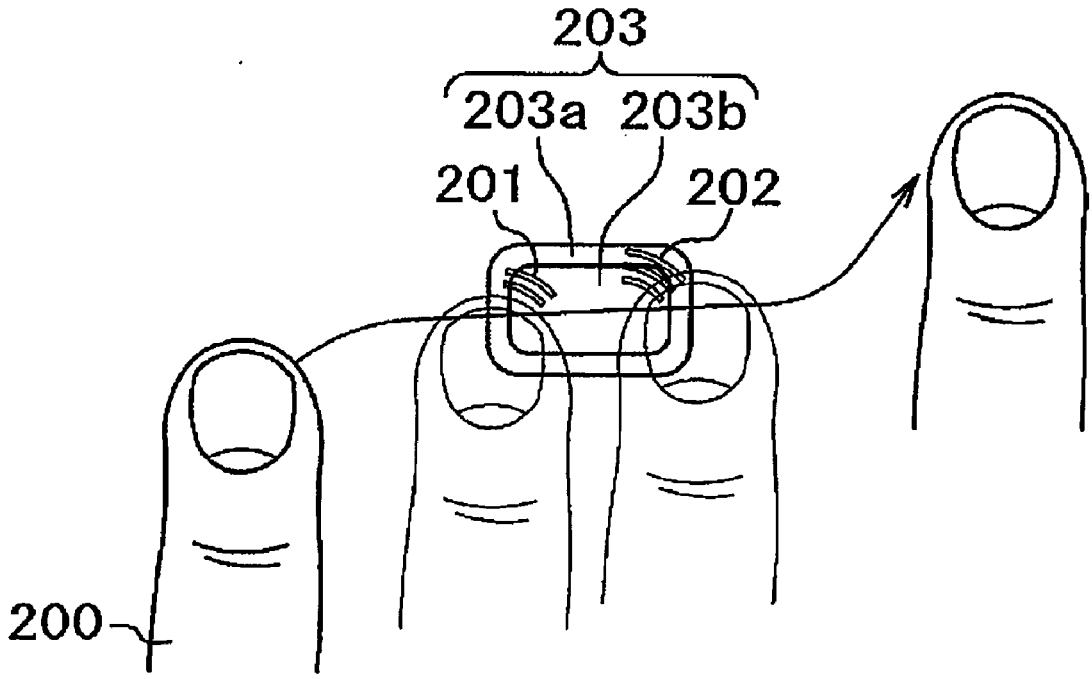

Figure 3