FIG. 1

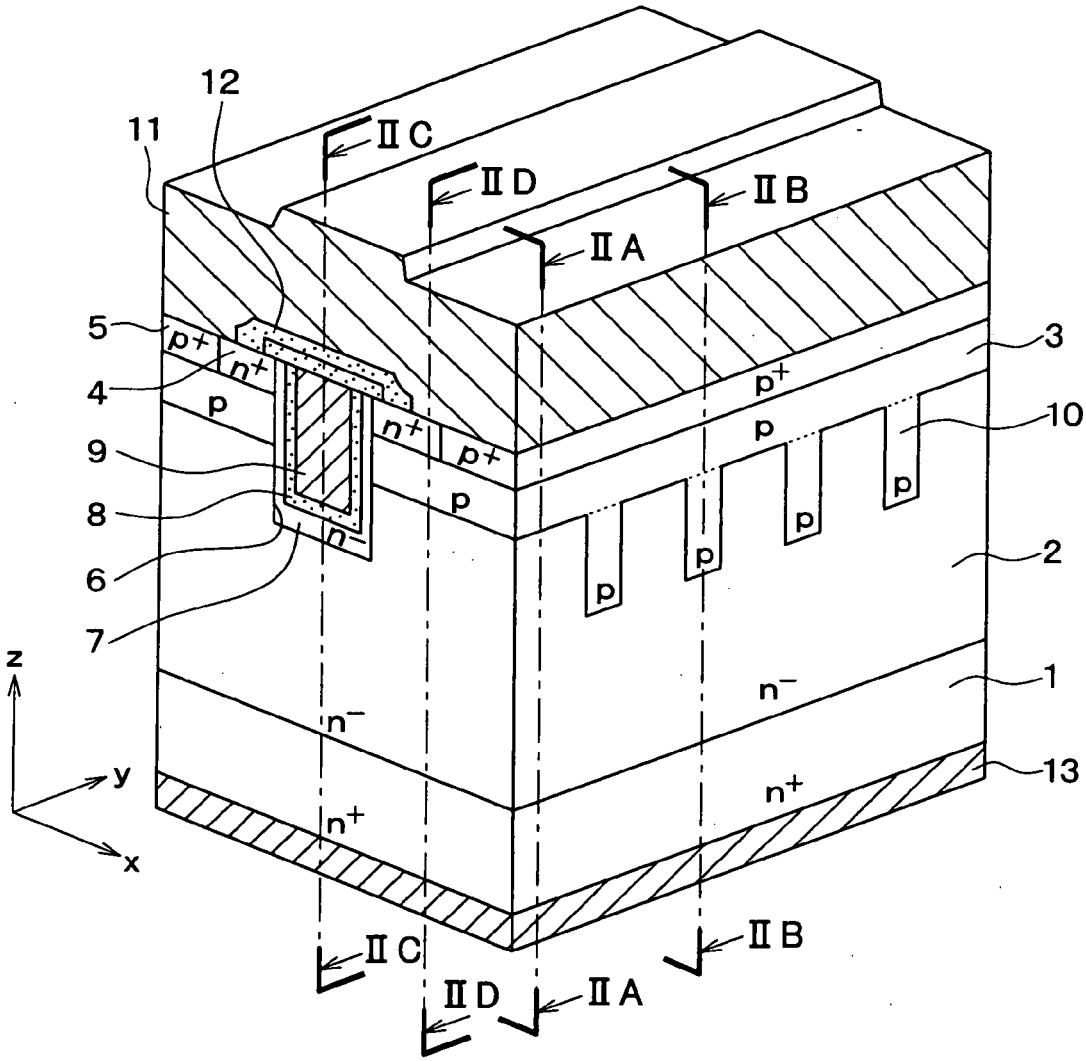
12
11
II C
II D
II B
II A
5
p+
n+
4
p
n+
p+
9
8
p
n−
6
7
3
p+
p
10
p
p
p
p
2
z
y
x
n−
1
n−
13
n+
n+
II C
II D
II A
II B