FIG. 2A

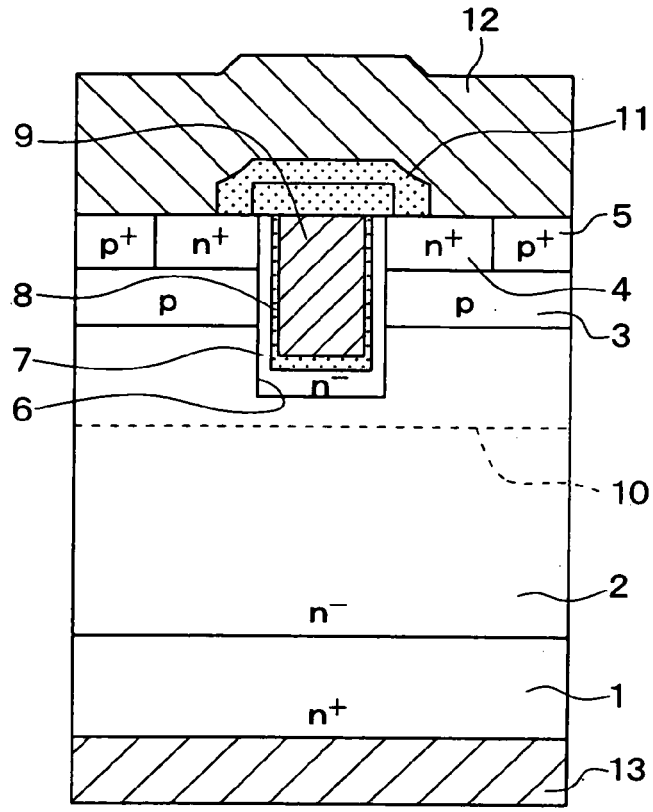
12
9
11
5
p+
n+
n+
p+
8
p
p
4
3
7
n−
6
10
2
n−
1
n+
13

FIG. 2B

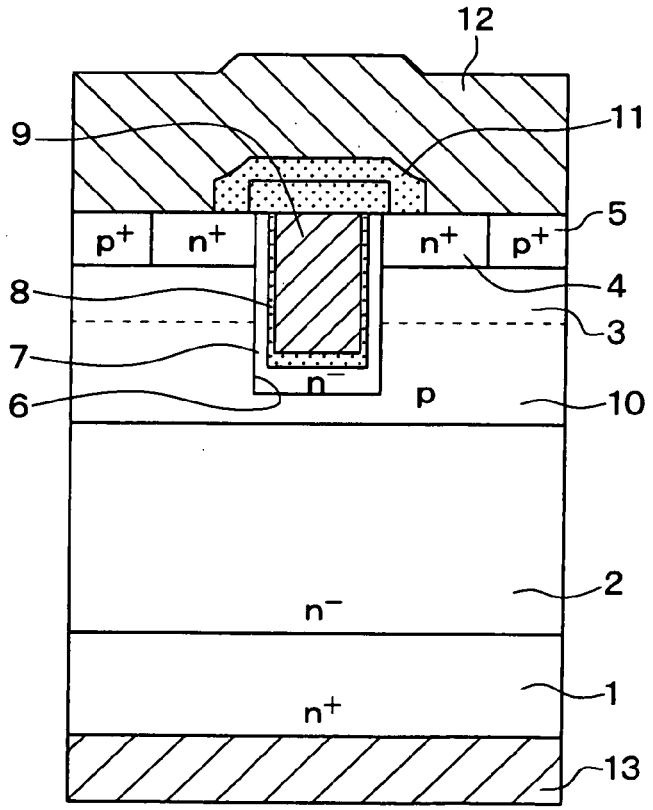
12
9
11
5
p+
n+
n+
p+
8
4
3
7
n−
6
p
10
2
n−
1
n+
13