FIG. 40

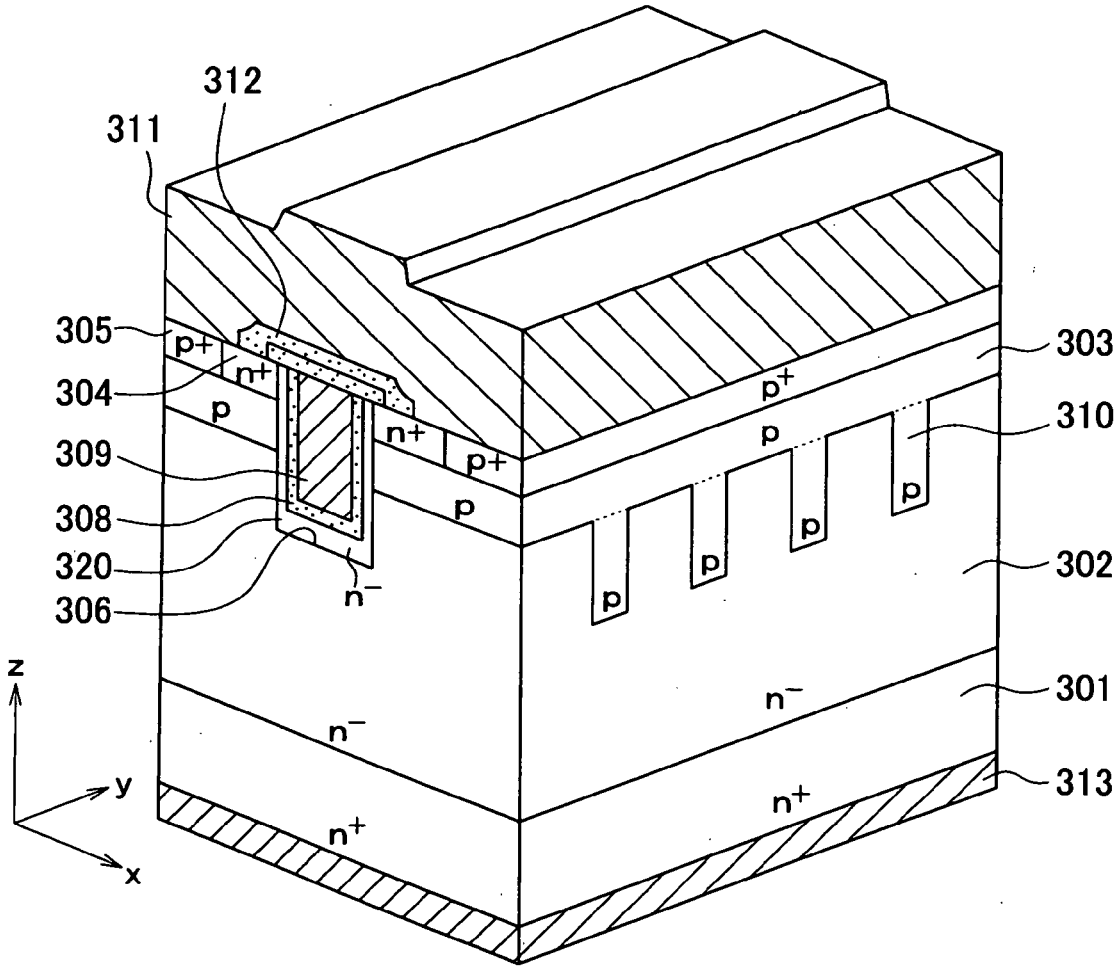
312
311
305
p+
n+
304
p
309
n+
p+
308
p
320
306
n−
303
p+
310
p
p
p
p
p
302
301
n−
n−
313
n+
n+
z
y
x