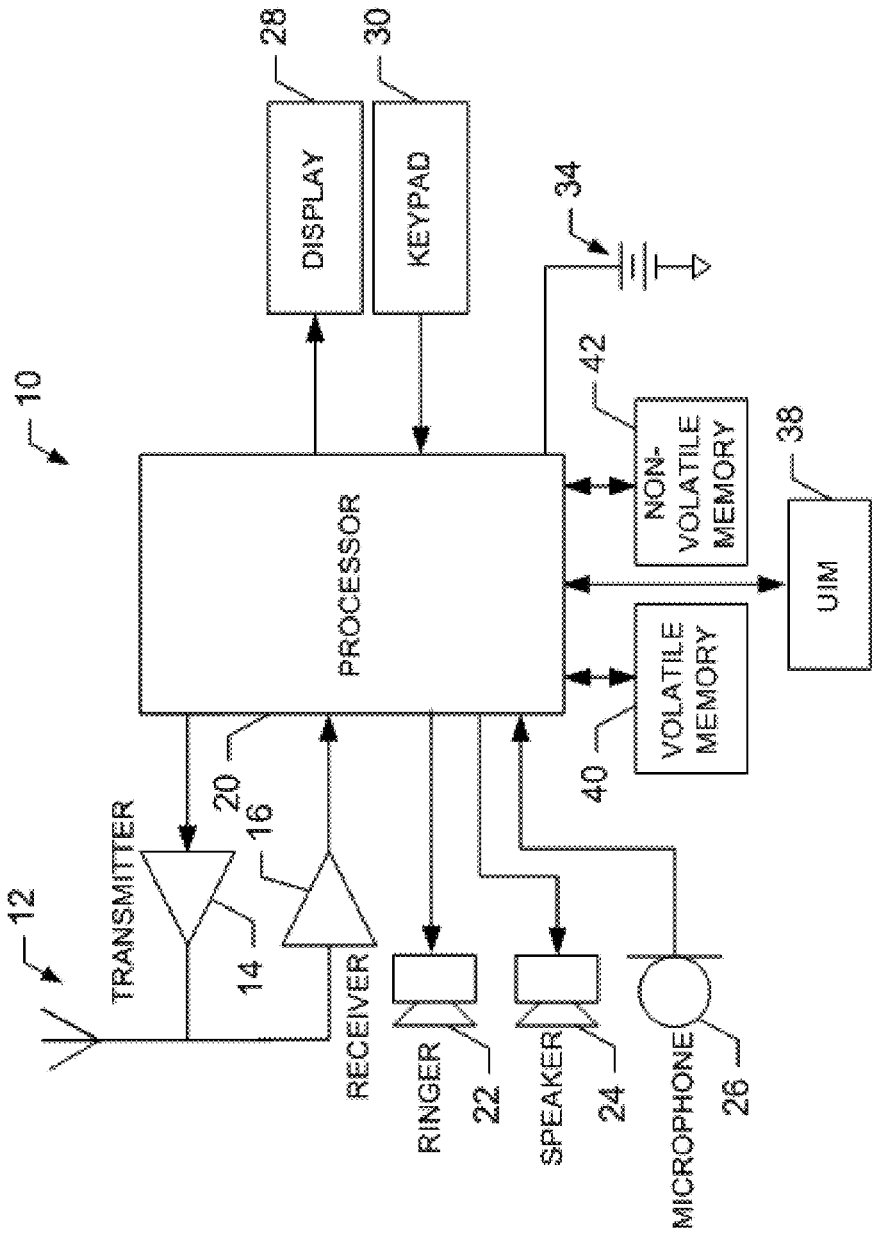
10
12
TRANSMITTER
14
16
RECEIVER
20
PROCESSOR
RINGER
22
SPEAKER
24
MICROPHONE
26
DISPLAY
28
KEYPAD
30
34
VOLATILE MEMORY
40
NON-VOLATILE MEMORY
42
UIM
38

FIG. 1