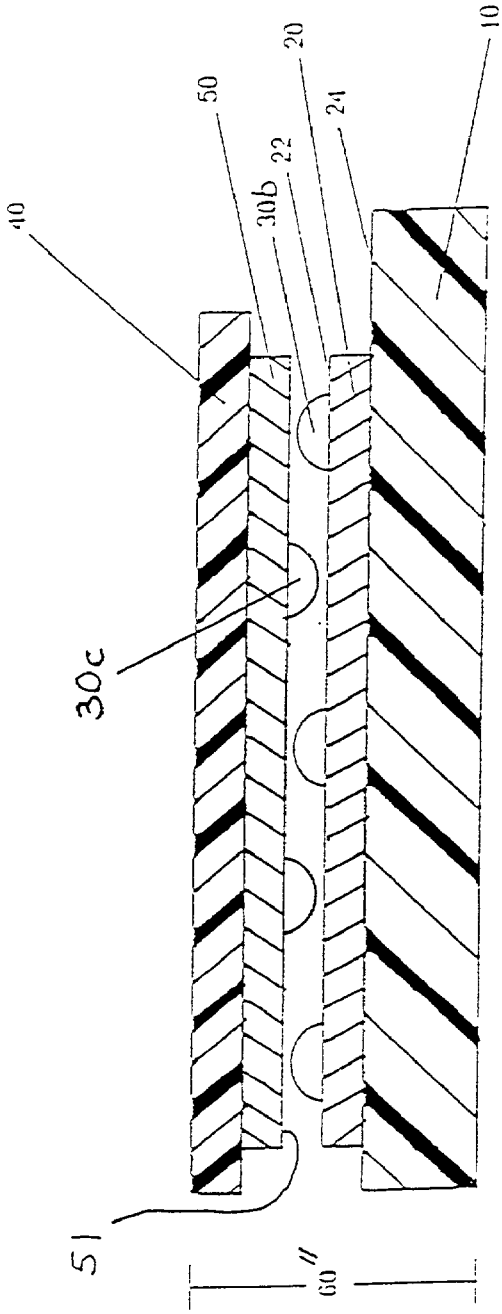

Figure 1B