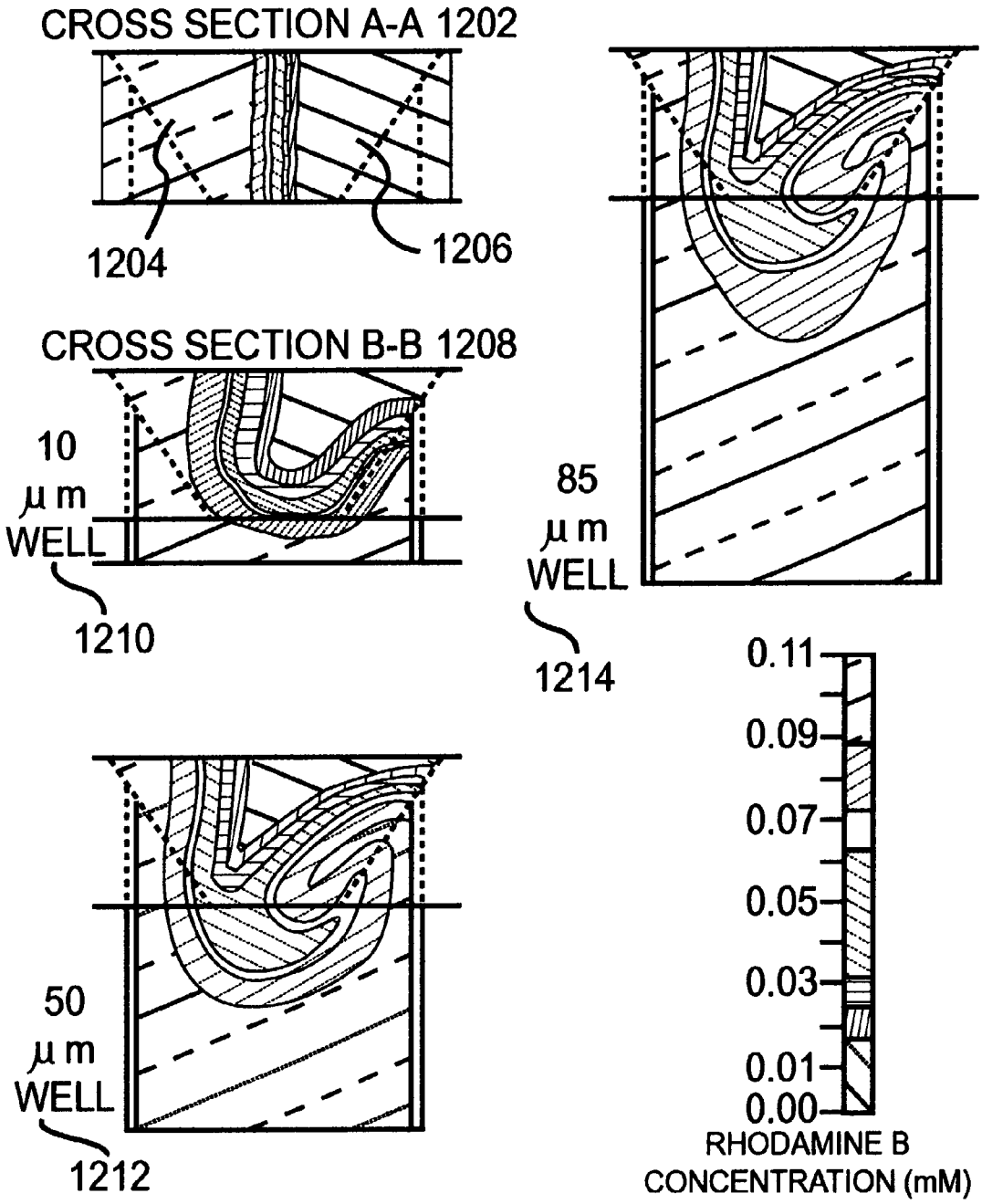
CROSS SECTION A-A 1202
1204
1206
CROSS SECTION B-B 1208
10 μm WELL
1210
85 μm WELL
1214
50 μm WELL
1212
0.11
0.09
0.07
0.05
0.03
0.01
0.00
RHODAMINE B CONCENTRATION (mM)

FIGURE 12