Fig. 1

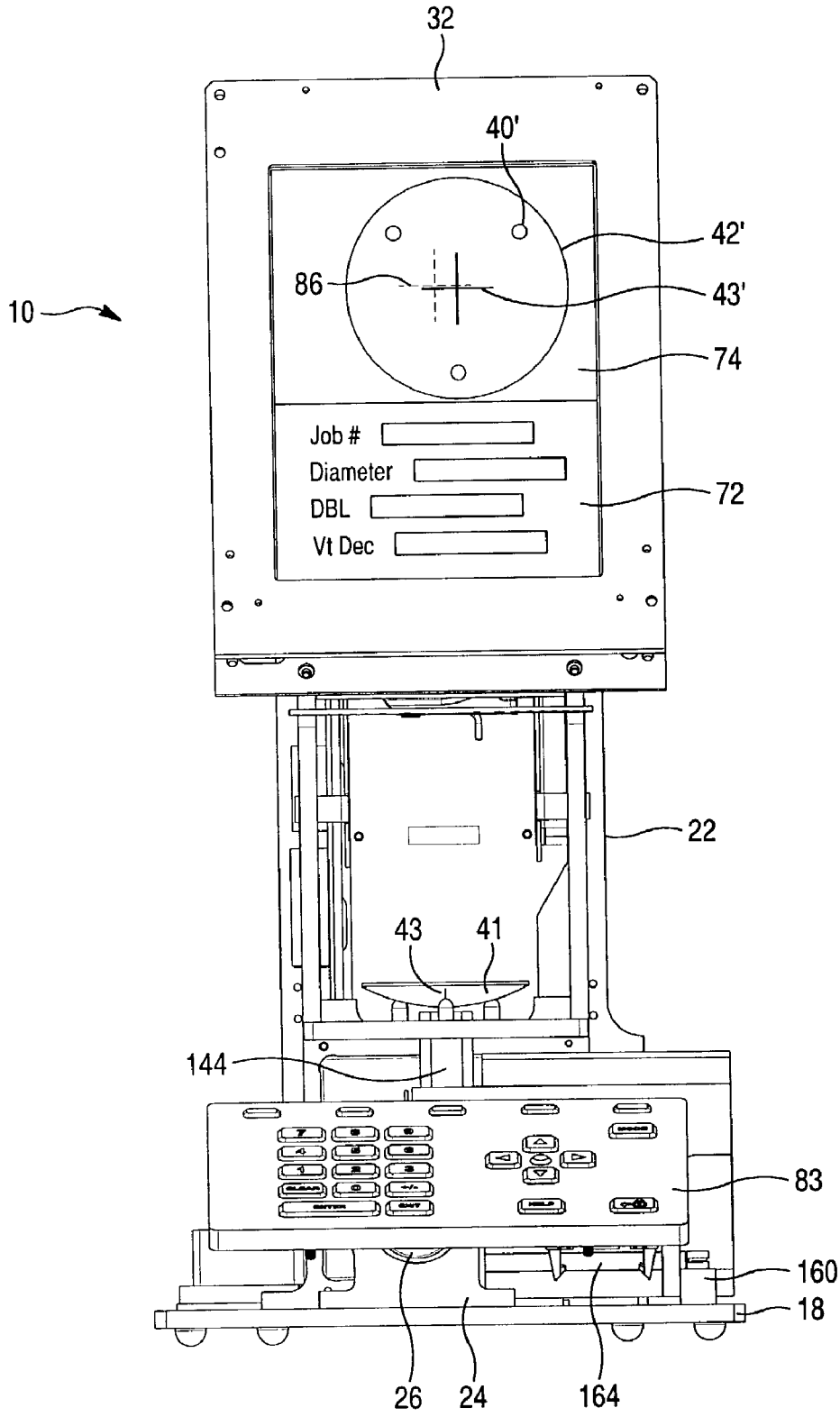
32
40'
42'
86
43'
10
74
Job #
Diameter
DBL
Vt Dec
72
22
43
41
144
83
160
18
26
24
164