Fig. 2

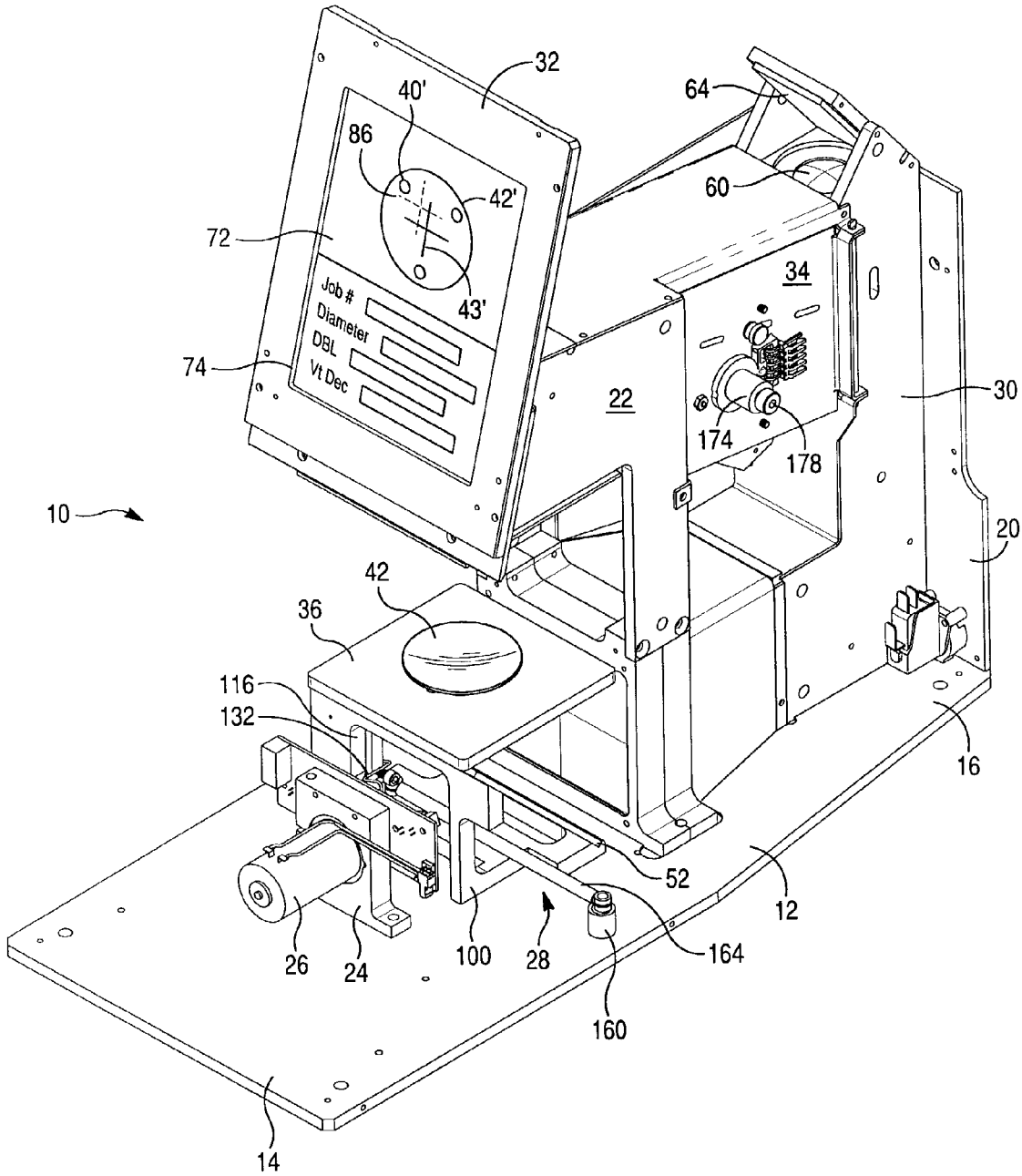
32
40'
86
42'
43'
72
Job #
Diameter
DBL
Vt Dec
74
64
60
34
22
30
174
178
10
20
42
36
116
132
16
52
12
26
24
100
28
164
160
14