Fig. 3

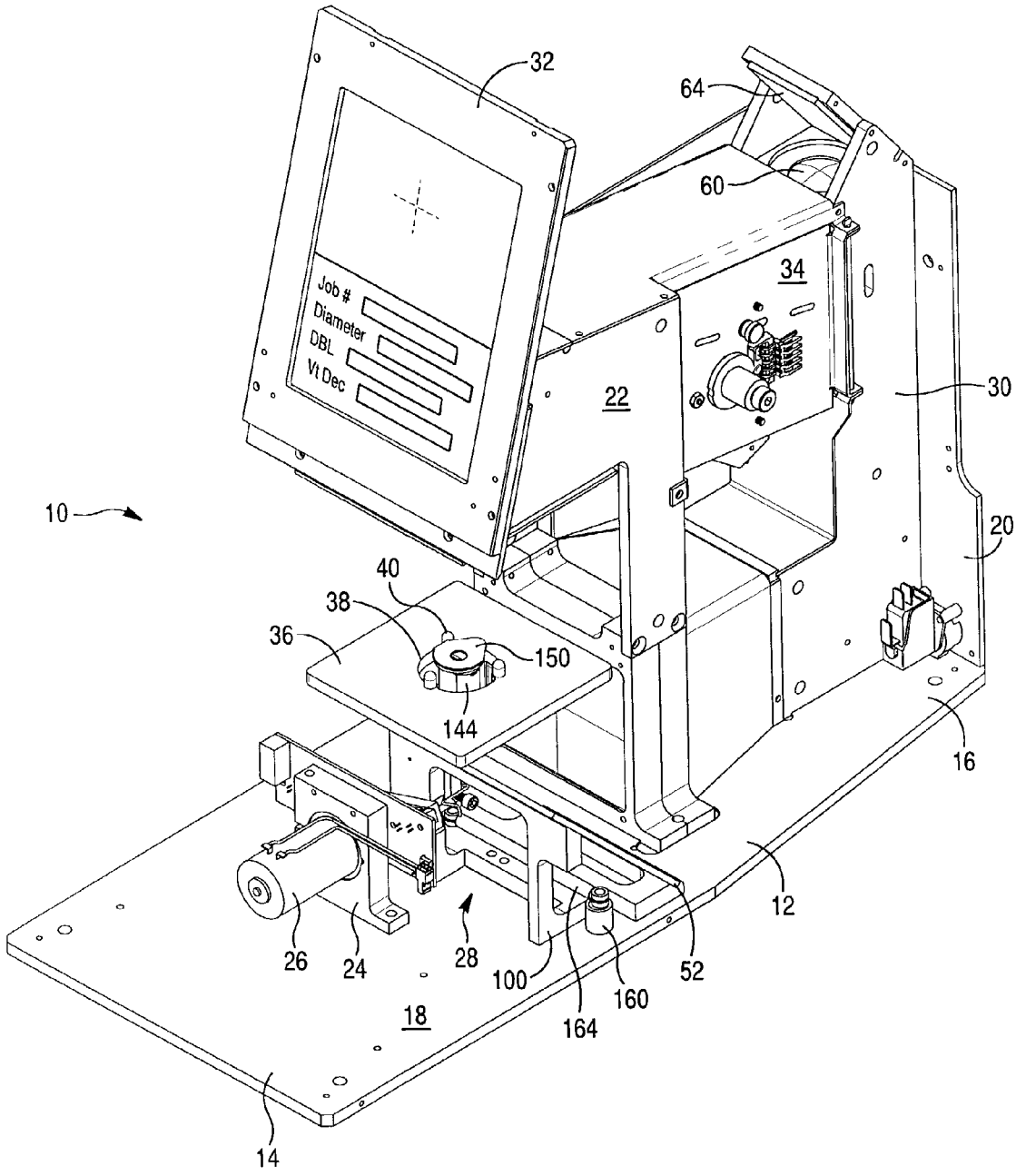
32
64
60
34
Job #
Diameter
DBL
Vt Dec
22
30
10
20
40
38
36
150
144
16
12
26
24
28
100
52
160
164
18
14